Last saved by: echerkasskaya on Tuesday, Sep 20, 2016 - 2:29:07 PM
4/25/2014 1:39:27 PM

General Notes:

1. All work shall be performed in accordance with applicable Federal, State local codes and regulations, and in accordance with the Contractor's health and safety plan.

2. Contractor shall obtain all state and local permits not provided by Developer prior to start of construction. The Contractor shall be responsible for site access, site security, site safety, support and coordinate between sub-contractors as required, construction scheduling, earthwork, demolition and excavation of obstructions, disposal of excavated soil, demolition debris and ground water.

3. Foundation drawings are in accordance with the approved Detailed Development Plan (DDP) narrative and appendices as approved by the United States Environmental Protection Agency (USEPA) and Maryland Department of the Environment (MDE).

4. Review the DDP narrative and appendices. The appendices of the DDP include:
   a. Head Maintenance System and Transfer Station Contingency Plan;
   b. Health and Safety Plan (HASP);
   c. Material Handling and Management Plan (MHMP);
   d. Spill Prevention and Response Plan (SPRP); and
   e. Storm Water Pollution Prevention Plan (SWPPP).

5. Elevations are referenced to Baltimore County and City Metropolitan Datum (BCCM), which equals -0.811 feet on the National Geodetic Vertical Datum (NGVD 29). Horizontal datum is referenced to Baltimore City Grid Meridian.

6. Conditions illustrated on foundation drawings developed from information available in:
   a. Existing Conditions drawing provided by civil engineer (MRA).
   b. Phase II construction completion report prepared by Black & Veatch, dated January 2000.
   c. Geotechnical investigations performed by Mueser Rutledge Consulting Engineers in 1988, 1989, 1991, 1999, 1993, 2006 and 2013.
   d. Historic foundation information from Allied Signal.

7. Contractor shall verify and mark location of all existing underground utilities and structures within 15 feet of the work before starting construction. Perform exploratory excavations to verify utility location and elevation where necessary.

8. Work points shown on the drawings have been developed on available survey information. Contractor shall survey and locate the proposed structure and verify the validity of the work points in the field prior to start of construction. Any discrepancies shall be brought to the attention of the Developer for resolution.

9. Contractor shall coordinate all construction activities performed within 50 feet of the Existing Thames Street Wharf Building with Building operations and use. Building operations and use shall take precedence over construction activities.

10. All waste material and construction debris shall become the property of the Contractor and shall be promptly removed from the site. Contractor shall maintain all areas in a neat and unobstructed condition, both during and upon completion of the work.

11. Construction is to be performed on a site regulated by the USEPA and MDE. Requirements for excavation, backfill, and restoration of the environmental remedy differ based on location.

12. Area 1 – Construction to the west of the Soil-Bentonite Hydraulic Barrier is being performed on the surface of a Multimedia Cap (MMC). Preserve the MMC for continued functional use. All protective measures shall be taken to prevent mechanical damage and contamination of the cap from chromium (soil or groundwater) or oil/fuel product.

13. Area 2 – Construction to the east of the Soil-Bentonite Hydraulic Barrier supports a Soil Cap. Excavation and restoration of the Soil Cap shall be in accordance with the Environmental Drawings.

14. Perform all work in accordance with the sequencing enumerated on the Contract Documents. Deviation from the sequencing indicated shall be subject to approval by the Developer.

DRAWING LIST:

Drawing Number	Drawing Title
DDP-F1.01	GENERAL AND TECHNICAL NOTES
DDP-F1.02	GENERAL AND TECHNICAL NOTES
DDP-F1.03	GENERAL AND TECHNICAL NOTES
DDP-F1.10	BORING LOCATION PLAN
DDP-F1.11	GEOLOGIC SECTION A-A
DDP-F1.12	MULTI MEDIA CAP & SOIL CAP AS-BUILT CONDITION
DDP-F1.20	SHEET PILE BARRIER WALL PLAN
DDP-F1.21	SHEET PILE BARRIER WALL CONSTRUCTION SEQUENCE
DDP-F1.22	SHEET PILE WALL TYPICAL DETAILS
DDP-F1.30	PILE CAP CONSTRUCTION SEQUENCE
DDP-F1.40	FOUNDATION PLAN
DDP-F1.41	FLOOR PARTIAL PLAN
DDP-F1.42	FLOOR PARTIAL PLAN
DDP-F1.43	FOUNDATION PARTIAL PLAN
DDP-F1.44	FOUNDATION PARTIAL PLAN
DDP-F1.50	FOUNDATION DETAILS & SECTIONS
DDP-F1.51	FOUNDATION DETAILS & SECTIONS
DDP-F1.52	FOUNDATION DETAILS & SECTIONS
DDP-F1.53	FOUNDATION DETAILS & SECTIONS
DDP-F1.54	FOUNDATION DETAILS & SECTIONS
DDP-F1.60	PILE SCHEDULE

Earthwork:

General

1. Excavations will be advanced through the MMC (Area 1) and the Soil Cap (Area 2) into a former industrial facility. Foundations and slabs of the former facility remain in place. Soil and groundwater may be contaminated.
   a. For additional requirements of the Soil Cap, refer to Environmental Drawings.

2. Protect the MMC and Soil Cap from mechanical damage (puncture, overloading, bearing capacity failure, tearing, cutting, etc.), chemical contamination (cross-contamination by soil or debris mingling, groundwater discharge to MMC surface, etc.), and mixing of graded soil layers.

3. Treat spoils below the MMC as if they are contaminated with hexavalent chromium; demolish, handle, and manage debris in accordance with the MHMP.

4. Protect side slopes of excavation from raveling as a result of pile driving vibrations, erosion, etc. If side slopes ravel, cease excavation to prevent disturbance of geomembrane. Adjust excavation slope to protect MMC against raveling.

5. Materials excavated from above the geomembrane may be stockpiled for re-use on site. Materials for re-use shall be sampled and tested to verify conformance with specified material uses.

6. Remove obstructions which conflict with pile elements and pile cap elevations as provided on the Contract Drawings.

7. Decontaminate excavation and demolition tools before removing them from a contaminated area. For further details refer to MHMP.

8. Place a minimum of 30 inches of granular fill over the synthetic layers of the MMC in all areas without permanent Foundation Concrete. Construct using granular fill of the type specified herein.

9. Collect standing rain water and groundwater from excavations, isolate excavations from surface storm water. Prevent water from rising to within 24 inches of the bottom of the MMC.

10. The Developer will review test results and authorize the Contractor to dispose, re-use, or purchase materials and designate disposal management method and disposal destination.

11. Cover all stockpiles and temporary debris in accordance with the MHMP.

12. Apply moisture as required to prevent visible dust.

13. Segregate synthetic materials from soil for disposal. The Warning Layer, Cover Geotextile, and drainage net (above geomembrane) shall be managed separate from geomembrane and underlying synthetic materials.

14. Remove, handle, segregate, and replace rip rap removed for foundation construction.

Submittals

1. Submit for Developer approval more than 15 business days prior to mobilization to the site:
   a. Work plan for all earthwork operations. Provide a written description of the means and methods for excavation, backfill placement, restoration of the MMC, and mix and placement of soil-bentonite backfill where required. Include shop drawings where required and equipment data sheets for all equipment to be used onsite.

2. Submit for Developer approval more than 10 work days before performing work:
   a. Granular Materials: For each source and material, provide 5 gallon minimum bulk sample and perform physical testing of particle size distribution in accordance with ASTM D422 and moisture density in accordance with ASTM D698 (5 points minimum).
   b. Provide material delivery tickets daily.

3. Submit for Developer approval within 5 work days after performing the work in any area:
   a. Survey elevation of existing Geomembrane at four locations at each pile cap and survey elevation of repair Geomembrane at two locations below each pile cap.Record plan fill drawing indicating final grades.

Equipment

1. Submit equipment data sheets for each piece of equipment for use on the site to the Foundation Engineer.
   a. Use a flat bucket without teeth, and labor as required, to prevent intermixing of materials upon excavation. Use of tooth buckets above the geomembrane will not be permitted.

2. After excavating, handling, or transporting potentially contaminated materials, cover or decontaminate demolition and excavation tools before removing from the excavation.

3. Decontaminate trucks, loaders, or other equipment used to transport excavation spoils between the movement of different material types.

Materials

1. Materials subject to discoloration from weathering, exposure to water, etc. shall not be used onsite. If those materials are delivered to the site, they shall be removed from the site at no expense to the Developer. E.g. – White Marble / Limestone from the Texas Quarry source.

2. Capillary Break Stone – source shall be approved by the Developer and conform to the following:
   a. Consist of hard, strong, durable, sub-rounded to well-rounded particles of granite, granitic gneiss or diorite stone, free of roots, trees, stumps, concrete, construction debris, organic matter and other deleterious materials.
   b. Washed free of particles passing NO. 200 SIEVE.
   c. Meet the gradation requirements set forth by the Maryland Department of Transportation (MDOT) Standard Specifications for Construction and Materials or AASHTO M43, No. 57 aggregate as given below and as determined by ASTM C136:

Sieve Size	Percent Passing
1 ½"-inch	100
1"-inch	95 to 100
¾"-inch	--
½"-inch	25 to 60
⅜"-inch	--
No. 4	0 to 10
No. 8	0 to 5

3. Select Granular Fill – Natural sand and gravel products of the excavation or MDOT Graded Aggregate Subbase containing no more than 5% retained on the 3/4 inch sieve and containing less than 12% by dry weight passing the No. 200 sieve.

4. Select Structural Fill – Natural sand and gravel products of the excavation, or MDOT Graded Aggregate Subbase containing less than 12% by dry weight passing the No. 200 sieve; or MDOT Crusher Run Aggregate CR-6, containing not more than 15% by dry weight passing the No. 200 sieve.

5. Protective Stone Barrier / Utility Bedding – Blend by total weight 25% Select Structural Fill and 75% of AASHTO M34, No. 1 coarse aggregate to obtain a uniform gradation.

6. Separation Geotextile – Non-woven geotextile, 10 oz. per square yard or heavier.

7. Rigid Insulation – Extruded Polystyrene Board shall be:
   a. "MOLDED POLYSTYRENE TYPE XIV-CERTIFIED VIRGIN" as manufactured by Mid-Atlantic Foam of Winchester, VA or approved equal.

8. Geofoam – Extruded Polystyrene Board shall be:
   a. "EPS15" as manufactured by EPS Industry Alliance, Crofton, MD or approved equal.

9. Flowable Fill – Portland cement and fly ash pozzolanic mortar fill of such strength to be excavated by hand tools.

10. Soil-Bentonite Backfill – A mix of bentonite slurry, clean onsite soils, dry SW-101 bentonite. Thoroughly mix to achieve uniform consistency with soil clods less than 1/4" in size, meeting the following requirements:
    a. SW-101 Bentonite – as manufactured by WYO-BEN, Inc.
    b. Slump of 4" min. to 6" max.
    c. Calculate and mix dry SW-101 bentonite to be 3% by dry weight of the backfill. Add bentonite slurry to achieve specified slump.
    d. Backfill Gradation meeting the following criteria:

Sieve Size	Percent Passing
3"	100
¾"	85-100
#4	65-95
#40	35-75
#200	20-35

    e. Sample and test to confirm an in-place permeability of 1x10-7 cm/sec or less
    f. Sample Collection
       f.1. Dry Samples – Collect four samples of the in-place granular soil or imported soil after mixing with dry bentonite addition. Sample at even intervals along the alignment proposed for raising the S-B Barrier.
       f.2. Wet Samples – Collect samples of prepared soil-bentonite backfill at 50 foot spacing, but no less than one for each day active mixing is performed. Obtain "wet" samples from the surface of the trench on completion of mixing with slurry.
       f.3. Samples will be collected by either the Engineer or by the Contractor under Engineer.
       f.4. Place samples in water tight plastic containers with screw top lids.
    g. Sample Handling
       g.1. Ship samples by overnight delivery; each shipment should weigh less than 5 pounds.
       g.2. Store Samples at room temperature out of direct sunlight until test specimens are prepared.
    h. Sample Testing
       h.1. Dry Samples: Perform ASTM D 422 "Method for Particle Size Analysis of Soils" on each "dry" sample for comparison with specification.
       h.2. Wet Samples: Perform ASTM D 5084 Measurement of Hydraulic Conductivity of Saturated Porous Media Using a Flexible Wall Permeameter" on each wet sample. Use Method C – falling head.
    i. Backfill shall be free of deleterious materials including: organics, construction debris, refuse, etc.
    j. Backfill should be placed to raise barrier to towithin6" of existing MMC synthetic layers.
    k. Backfill should be placed at the end of sheet pile barrier wall for cap closure.

11. Imported materials shall be obtained from an environmentally clean source approved by the Developer and qualify as clean imported Fill Material under the MDE voluntary cleanup program. Test samples shall be taken from stockpiles prepared for import. Provide supplier certification and submit analytical test data documenting that materials are free of chemical and organic contamination.
12. Contaminated or otherwise unsuitable materials delivered and placed shall be removed and replaced.
13. Excavation spoils and imported materials shall be stored at the locations and in the manner indicated on the Contract Drawings with Developer approval.
14. Manufactured materials shall be handled and stored in accordance with manufacturer recommendations. UV sensitive materials shall be covered and protected in storage.
15. Materials which the Developer suspects may be contaminated shall be handled separately from materials which are clean.

Utilities

1. Close and abandon utilities servicing the site as indicated on the Contract Drawings. Coordinate closure with utility companies and Developers, maintain service to neighboring properties. Remove all utilities encountered within the excavations to the limits of the excavation. Fill and cap utility pipes or conduits abandoned in place. Dispose removed utility pipes, etc.

2. Locations and dimensions of utilities shown on the Contract Drawings are approximate. Other utilities may exist at unknown locations and depths. Utility locations and depths shall be verified by the Contractor prior to performing excavation and termination work.

3. Do not excavate below surface of protective concrete barrier in utility corridors.

4. Place backfill at new utilities in accordance with the requirements for each utility company. Use natural sand and gravel products of the excavation for controlled backfill around utilities.

5. Place protective stone barrier / utility bedding in lifts 8 inches in maximum loose thickness and compact with vibratory compactor.

Controlled Backfill

1. Place natural sand and gravel products of the excavation and imported materials of the excavation in lifts 8 inches in maximum loose thickness and compact in a controlled manner to obtain the lines and grades indicated on the Contract Drawings.

2. Compact all materials placed to obtain:
   a. 95% standard Proctor maximum dry density below pile supported structures;
   b. 98% standard Proctor maximum dry density below slab-on-grade;
   c. 98% standard Proctor maximum dry density for all trench backfill;
   d. Capillary Break Stone or other clean gravel products shall be tamped or rolled in place, as access allows;
   e. 98% standard Proctor maximum dry density for street and sidewalk backfill.

3. Controlled fill which fails to meet the compaction criteria shall be re-compacted, reworked, wetted etc. as necessary to achieve compaction criteria.

4. The Developer will test the density of soil in place to demonstrate proper compaction of fill. Material density in place will be tested using ASTM D6938 "Standard Test Method for In-Place Density and Water Content of Soil and Soil-Aggregate by Nuclear Methods (Shallow Depth)", and/or ASTM D1556 "Standard Test Method for Density and Unit Weight of Soil in Place by the Sand-Cone Method". Minimum testing includes:
   a. At least one sand cone test with moisture content determination will be performed adjacent to a nuclear density meter reading for each ten nuclear density meter readings, to confirm nuclear density readings.
   b. One test for each 5,000 square feet of each lift placedand one for every 150 cubic yards placed.
   c. Utility trench Select Structural Fill: One test for every 75 cubic yards placed, andone for each two lifts.
   d. Testing is not required for Capillary Break Stone

Quality Assurance / Quality Control

1. The Contractor shall be responsible for: Quality Control of all materials and installation work; protection of completed work, and for documenting that the work meets the minimum requirements of the Contract Drawings. The Contractor shall designate an experienced Quality Control Manager, and shall delegate the responsibility and authority to the Quality Control Manager to control materials and work processes, and confirm and document the work.

2. The Contractor shall provide support for sampling and testing, and shall provide access to the Work area for Developer inspection, sampling, and testing.

3. The Owner will provide for stockpile sampling, excavation, and controlled fill construction.

Foundation Subgrade

1. For foundation subgrade preparation notes, refer to Drawing DDP-F1.02.

Synthetic Layer Penetrations and Repairs:

General

1. Installer: All alterations and repairs to the Geomembrane shall be performed by an Approved Installation Contractor (AIC) by the International Association of Geosynthetics Installers (IAGI).

2. Demonstration: Construct a mockup independent of the existing multimedia cap with complete pile penetration repair/seal. In the presence of MDE demonstrate performance of methods and materials to be leak-free with Smoke Test in accordance with Geosynthetics Research Institute Geomembrane (GM) Standard GM26.

3. Construct multimedia cap penetrations as indicated on Contract Drawings. Prior to welding, prepare surface of Geomembrane by steam cleaning, hand cleaning or applying an approved solvent to provide adequate welding surface.

4. Limit exposure of Geomembrane to intense heat and sunlight. Place temporary cover over exposed synthetic layers at the end of shift. Do not place permanent cover or fill until approved by Foundation Engineer.

5. Seal Geomembrane cuts, overlaps, and wrinkles with continuous extrusion welds.

6. Together with the Engineer inspecting the work, observe material during installation, where material appears damaged or compromised, remove material and replace.

7. Installation of synthetic layers shall be in accordance with MMC specifications as prepared by Black and Veatch for original construction in all cases except where superseded by these notes and drawings.

8. Upon delivery of LLDPE Geomembrane, for each roll test Thickness, for each 3,000 square feet test Density, Minimum Tensile Properties, Tensile Strength at Break, Tear Resistance, and Puncture Resistance in accordance with Test Methods shown on Drawing DDP-F1.03 Materials Note 2. Reject and remove from the site any materials that do not meet the minimum required test values.

9. Perform vacuum chamber testing on each geomembrane penetration, including boot assembly with mechanical clamp and gaskets, and all field welds; in accordance with ASTM D5641. In locations where field vacuum chamber testing is not feasible, perform spark test in accordance with ASTM D6395. In the event a test fails, repair all holidays and leaks, re-test to demonstrate acceptance. Provide a summary of testing to Developer.

Submittals

1. Submit to the Developer for approval no less than 20 work days prior to delivery on site, samples, technical data sheets, and manufacturer's quality control testing of all proposed synthetic materials for geomembrane penetration repairs and MMC cap component replacement.

2. Submit results of quality control testing to the Developer for review and approval no less than 1 work day prior to use on site.

3. Submit to the Developer for review and approval all QA/QC documentation requesting acceptance of Synthetic Layer Penetrations and Repair by Honeywell in accordance with the Construction Quality Assurance / Construction Quality Control Plan.

Materials

1. Procure, maintain, and store the following materials onsite in a location that is dry, level, and readily accessible to the work. While in storage and upon installation, limit synthetic material exposure to moisture, intense heat and sunlight. Storage of synthetic rolled materials on raised supports is not acceptable. Submit samples, material data sheets, and manufacturer testing to the Developer for review and approval no less than 10 work days prior to delivery on site. Compare delivery tickets with the approved submittal for compliance. Non-complying materials will be rejected and shall be removed from the site.

2. 60 mil Linear Low Density Polyethylene (LLDPE) Geomembrane:

Physical Property	Test Method	Value	Frequency
Carbon Black Content, Percent, (allowable range)	ASTM 1603	2.0-3.0	50,000 ft^2
Carbon Black Dispersion, (acceptable level)	ASTM 3015	Grade A-1, A-2 or B-1	Once per 180,000 lbs of resin
Thickness, mils (minimum average lowest individual)	ASTM D 751 Modified	60 (54)	Each roll
Density, g/cm^3 (maximum)	ASTM D 15085	0.930	50,000 ft^2
Minimum Tensile Properties (each direction)	ASTM D 638 Modified	--	50,000 ft^2
Tensile Strength at Break (lb/in. width)		184	
Elongation at Break (percent)		625	
Tear Resistance, lbs (minimum)	ASTM D 1004 Die C (1988)	24	50,000 ft^2
Low Temperature Impact, °C (maximum allowable failure temp.)	ASTM D 746	-60	Once per 1,800,000 lbs of resin
Dimensional Stability, % (allowable range)	ASTM D 1204 1 hour at 100°C	±3.0	Once per 1,800,000 lbs of resin
Environmental Stress Crack, hrs (minimum with no failure)	ASTM D 1693 Modified	1500	Once per 1,800,000 lbs of resin
Puncture Resistance, lbs (minimum)	FTMS 101C Method 2065	78	50,000 ft^2

3. Base Geotextile, Cover Geotextile, and Cushion Geotextile: Manufacturer testing no less than 1 test for each 75,000 square feet manufactured, shall show:

Property	Method	Manufacture MARV
Fabric Weight, oz/yd^2	ASTM D 5261	16
Grab Strength, lbs	ASTM D 4632	325
Grab Elongation, Percent	ASTM D 4632	70
Trapezoid Tear Strength, lbs	ASTM D 4533	150
Mullen Burst Strength, lbs/in^2	ASTM D 3786	700
Puncture Strength, lbs	ASTM D 4833	195
Apparent Opening Size, U.S. Standard Sieve – (AOS)	ASTM D 4751	70
U.V. Resistance (500 hours)	ASTM D 4355	70

4. Geosynthetic Drainage:
Consists of Cover Geotextile over Geonet as required below.

Geonet: Manufacturer testing no less than 1 test for each 75,000 square feet manufactured, shall show:

Property	Test Method	Manufacture MARV
Resin Density, g/cm^3 (minimum)	ASTM D 1505	0.940
Resin Melt Index, g/10 min (maximum)	ASTM D 1238	1.0
Carbon Black Content, Percent (minimum	ASTM D 1603	2
Thickness, inches (minimum)	ASTM D 1777	0.250
Foaming Agents, % (maximum)	N/A	0
Transmissivity, m^2/sec (at 2000 psf, gradient 0.1	ASTM D 4716	2.8×10^{-3}

5. Geosynthetic Clay Liner (GCL):

Shall be a factory manufactured product consisting of a layer of granular sodium bentonite clay encapsulated between two geotextiles. The geotextile shall be held together by needling or by stitching. The granular bentonite shall be continuously adhered throughout the GCL and to the backing material so that no significant displacement of bentonite occurs when the GCL is. cut with a utility knife, punctured, or torn. No disassociation of the backing materials from the bentonite core shall occur.

   a. Sodium Bentonite:
   The bentonite utilized in the manufacture of the GCL, as well any accessory bentonite provided for seaming and detail work, shall be a virgin, first quality product mined and processed specifically for the purpose of Manufacturing a GCL. The bentonite producer shall provide certificates of analysis for the montmorillonite content certification, moisture content, fluid loss and swell index for each lot of the bentonite clay to be used in the GCL manufacturing. Manufacturer testing no less than 1 test for each 50,000 square feet manufactured, shows:

Property	Test Method	Value
Moisture Content	ASTM D 4643 or 2216	20% max as shipped
Fluid Loss	API 13A	18 ml max
Free Swell	USP-NF-XVII	22 ml min

   b. Geotextiles:
   The upper carrier geotextile shall be a woven product with a minimum mass per unit area of 3.25 oz/sy, in accordance with ASTM D 3776. The lower carrier geotextile shall be a nonwoven product with a minimum mass per unit area of 6.00 oz/sy, in accordance with ASTM D3776.
   c. Composite Geosynthetic Clay Liner:
   Manufacturer testing no less than 1 test for each 75,000 square feet manufactured, shows:

Property	Test Method	Value
Clay Mass/Area (lb/sf)	ASTM D 5261	1 (at 20% moisture)
Water Permeability (cm/sec) (5psi maximum effective confining stress)	ASTM D 5084 or GRI-GCL-2	1.0×10^{-9} cm/sec
Grab Strength (lbs)	ASTM D 4632	75
Grab Elongation (%)	ASTM D 4632	20
Puncture Resistance	ASTM D 4833	102

6. Visual Barrier: Shall be durable, non-degradable brightly or lightly colored and shall not impede drainage within cover soil.

7. PVC Piping: Manufacturer testing in accordance with ASTM D2729, Schedule 80, Cell Classifications 12454-B, or 12454-C with perforated Sections: ¼ inch holes, on one side spacing in accordance with ASTM D2729.

8. Boot: Manufactured boot meeting the requirements of LLDPE Geomembrane or better.

9. Boot Clamp: Metal clamp that is capable of being screwed tight.

10. Gasket: Rubber gasket that fits between boot and pile.

Quality Control Testing:

1. Upon delivery of LLDPE Geomembrane, for each roll test Thickness, for each 3,000 square feet test Density, Minimum Tensile Properties, Tensile Strength at Break, Tear Resistance, and Puncture Resistance in accordance with Test Methods shown on Drawing F1.03 Materials Note 2. Reject and remove from the site any materials that do not meet the minimum required test values.

Quality Assurance Testing:

1. Perform vacuum chamber testing on each geomembrane penetration, including boot assembly with mechanical clamp and gaskets, and all field welds; in accordance with ASTM D5641. In locations where field vacuum chamber testing is not feasible, perform spark test in accordance with ASTM D6395. In the event a test fails, repair all holidays and leaks, re-test to demonstrate acceptance.
   a. A representative of the Foundation Engineer will be present for a minimum of 15 percent of tests to welds and 66 percent of boot tests and at their discretion may request re-testing of select locations.
   b. Submit results of all tests for each excavation to the Developer for review and approval prior to placing permanent fill, mudmat, formwork, or reinforcing steel.

BHC ARCHITECTS
BEATTY•HARVEY•COCO ARCHITECTS, LLP
NYC | LONG ISLAND | BALTIMORE
1300 Thames St., Suite 10, Baltimore, Maryland 21231
p: (410) 752-2759

developer
Beatty Development Group
1300 Thames Street, Suite 10
Baltimore, MD 21231
P 410-332-1100

structural engineer
Morris Ritchie & Associates, INC
1220-C East Joppa Road, Suite 505 INC
Towson, MD 21286
P 410-821-1690

mep engineer
JDB Engineering, Inc.
225 International Circle, Suite 102
Hunt Valley, MD 21030
P 410-771-3433

geotech / foundation engineer
Mueser Rutledge Consulting Engineer
225 West 34th St
New York, NY 10122
P 917-339-9300

civil engineer
Morris Ritchie & Associates, INC
14280 Park Center Drive, Suite A
Laurel, MD 20707
P 410-821-1690

landscape architect
Mahan Rykiel Associates
800 Wyman Park Drive, Suite 100
Baltimore, MD 21211
P 410-235-6001

environmental engineer
ERM Group, Inc
200 Harry S Truman Parkway Suite 400
Annapolis, MD 21401
P 410-266-0006

interior designer
Brayton Hughes Design Studios
465 California Street, Suite 350
San Francisco, CA 94104
P 415-343-6108

food service
Cini Little International, Inc
20251 Century Blvd., Suite 375
Germantown, MD 20874
P 301-528-9700

lighting
Grenald Waldron Associates
260 Haverford Avenue, PO Box 525
Narberth, PA 19072
P 610-667-6330

landscape architect
Core Studio Design
1817 Bolton Street
Baltimore, MD 21217
P 410-878-7532

fire protection engineer
Jensen Hughes
3610 Commerce Drive, Suite B17
Baltimore, MD 21227
P 410-737-8677

DETAILED DEVELOPMENT PLAN
(APRIL 29, 2016)

key

NONE

project
WILLS WHARF OFFICE/HOTEL

HARBOR POINT
BALTIMORE, MARYLAND

seal

issued	date	description

title
GENERAL AND TECHNICAL NOTES

drawn by: E.C.
checked by: G.S.
scale: NONE
project number: MRCE - 12582
sheet number: DDP-F1.01

Tuesday, Sep 20, 2016 - 02:33:40 PM
© Beatty Harvey Coco Architects, LLP
Eugina Cherkasskaya G:\DWGS\125\12582\DDP-F1.01.dwg

Last saved by: echerkasskaya on Tuesday, Sep 20, 2016 – 2:29:46 PM
4/25/2016 1:30:27 PM

Foundation Pile Notes:

1. Pile tip elevations shown on drawings are an estimate and may vary based on actual subsurface conditions and results of PDA testing.

2. Steel Pipe Piles shall be 14 inch OD pipe x ½" Wall and shall be in conformance with ASTM A252 Grade 3 Fy = 45 ksi with conical tips seal welded.

3. Conical tip shall be P–13006 Conical Point inside flange as manufactured by Associated Pile and Fitting or approved equal.

4. All steel Pipe Piles shall be driven to the minimum tip elevations shown on contract drawings and as required by testing to provide a capacity of twice the service load. The drawings indicate the estimated pile length based on advancing the piles to Sand Stratum S4. Soil investigations data is available for general information. The contractor shall interpret for himself the subsurface soil and rock conditions.

5. Piles shall be driven with a variable stroke hammer delivering a rated energy range of 50,000 to 120,000 foot–pounds, such as the Delmag D46–32 or similar, and shall be capable of achieving the pile capacity indicated considering: hammer impact velocity; ram weight; stiffness of hammer and pile cushions; cross section, length, and total weight of pile; and character of subsurface material to be encountered, without damaging the pile. The pile hammer shall be subject to prior approval by the Developer.

6. Piles shall be driven within 3 inches of plan location and not be out of plumb by more than 2 percent.

7. Piles have been designed to carry the following service loads:
   a. Axial Compression: 200 tons
   b. Axial Tension: 25 tons
   c. Lateral Load (Fixed Head): 15 tons
   d. Lateral Load (Free Head): 5 tons

8. Pile Cutting and Splicing

   a. Perform all welding in accordance with AWS D1.1. Only use welders qualified by AWS D1.1.
   b. Piles damaged at pile head and cut off to permit further driving shall be extended by splicing if necessary. Submit splice detail for approval.
   c. Splices shall be:

      c.1. Ends of piles to be spliced shall be squared before splicing
      c.2. Splice welds shall develop the full structural strength of the member
      c.3. Only one splice may be made in any one pile
      c.4. Splices shall not be located within 15 feet of the cutoff elevation of the pilePile Installation using followers is not permitted

8. Pile driving operations shall not be conducted within 50 feet of any freshly placed concrete until a minimum 72 hours setting time has elapsed.

9. Each pile shall be marked by painting horizontal lines at one–foot intervals and the number of feet at five–foot intervals. Piles shall be marked in inches in the upper length to facilitate determination of driving resistance.

10. Obstructions shall be removed or broken up to facilitate pile driving.

11. Tops of pile shall be cut level. The cut shall be neat and clean. All cutoff lengths shall become the property of the Contractor and shall be removed from the site at no additional cost to the Developer.

12. Jetting of piles is not permitted.

13. Use of followers is not permitted.

Pile Testing and Indicator Pile Program:

Prior to start of production pile material order and pile installation, the Pile Driving Contractor shall provide materials, equipment, Dynamic Testing Contractor, and execute the PDA/Indicator Pile Program as specified herein.

1. Provide name and qualifications of Pile Driving Contractor's independent Dynamic Testing Contractor. Dynamic Testing Contractor shall demonstrate performance of at least 5 projects of similar scope over the last 5 years and demonstrate experience in dynamic testing, analysis and interpretation, and CAPWAP analysis and interpretation.

2. Provide a resume for the lead field Foundation Engineer indicating at least 2 years of experience in equipment installation and operation of dynamic testing equipment.

3. Dynamic Test Pile locations are indicated in the Contract Drawings.

4. Dynamic test equipment, instruments, assembly, recorders, analysis programs, and reporting shall comply with ASTM D4945. Attach two strain transducers and two accelerometers to the top of each test pile as per Section 5.2 of ASTM D4945. The pile driving analyzer and accessories shall be manufactured by Pile Dynamics, Inc. or other equivalent. Test equipment shall have been calibrated within 6 months of use. Submit calibration Records to Foundation Engineer prior to mobilization.

5. Perform dynamic testing on each test pile in accordance with ASTM D4945 (PDA). Perform dynamic testing for the full length of pile driving and one restrike effort for each test pile, minimum.

6. Restrike each test pile 24 hours or more after initial driving with PDA. Warm up hammer on a non–test pile prior to restrike driving. Apply the same hammer type and configuration as for the original driving. Stop re–drive after 3 inches of pile penetration. Restrike may be terminated after 20 blows if pile butt movement is less than 1/4 inch at maximum allowable pile stress.

7. Analyze test readings to estimate pile load capacity. For each test pile record and provide as a minimum:

   a. Kinetic energy developed by the hammer
   b. Acceleration at pile top
   c. Compression forces in pile
   d. Tension forces in pile
   e. Capacity estimate at end of initial driving
   f. Capacity estimate at restrike

8. Prepare a Report including Dynamic Testing data meeting the requirements of Section 7 of ASTM D4945. Perform a refined wave equation analysis incorporating the results of dynamic testing for both original driving and restrike testing. Also provide transferred hammer energy, driving stress levels, dynamic modulus of elasticity, and pile tip elevation at maximum capacity. Estimate the ultimate static pile capacity, resistance distribution, and quake and damping factors obtained from dynamic testing. Include the Pile Driving Analyzer data record and information needed to correlate the PDA record with the respective pile driving record (blow count record) in the Report. A summary of the Dynamic Testing Results are to be reported in tabular form.

9. Perform a CAPWAP analysis also to be included in the Report. Use signal matching program, "CAPWAP", to analyze dynamic test data obtained from the last foot of original driving and restrike testing for each test pile. The CAPWAP analysis should include the following as a minimum:

   a. Displacement, velocity, and stresses (forces) for each pile segment
   b. A plot of the blow count v. the pile capacity.

10. The Foundation Engineer will define production pile driving resistance criteria.

11. A minimum of three PDA tests shall be performed for each original/replacement hammer brought on site for use (even if the replacement hammer is the same brand and model as the hammer to be replaced). The piles for PDA tests shall be selected by the Foundation Engineer. After PDA tests are performed, pile driving resistance criteria will be reviewed for each hammer by the Foundation Engineer.

Drilled Piles:

1. Piles are designed to carry a compressive load (service) of 100 tons.

2. Pile casing size and wall thickness shall be as indicated, conforming to American Petroleum Institute standard specifications, with a minimum yield strength (Fy) of 80 ksi.

3. Cement grout shall consist of a mixture of Portland cement, water, and fluidizers providing a minimum compressive strength of 5,000 psi at 28 days. Provide laboratory testing of trial mixes demonstrating strength compliance (See submittal section).

4. Cement shall be Portland Cement Type I, or II.

5. Mixing water for cement grout shall be clean and potable, free from oil, acids, alkali, salts, organic material or other deleterious substances.

6. Admixtures which control bleed, improve flowability, reduce water content and retard set may be used for the grout mix, are subject to the approval of the Foundation Engineer.
7. A high shear mixer shall be used for blending grout.

8. Grout pumps used for placement of grout shall be capable of developing a minimum pressure of 400 psi at the pump. The grout pump shall be a positive displacement piston pump or approved equal.

9. For each batch of grout mixed, the Contractor shall make a set of grout cubes. The Contractor's testing laboratory shall test strength of three cubes for each batch at 3, 7, and 28 days.

10. Pile reinforcing shall be threaded steel bars conforming to ASTM A–615, Fy = 75 ksi.

11. Reinforcing steel couplers and centralizers shall be compatible with the base steel. Couplers shall be capable of developing the full yield strength of the bar. Welding is not permitted.

12. The drilling equipment shall have sufficient power, torque, and downward thrust to advance the holes including penetration of obstructions, if encountered, and sufficient pump capacity to lift spoils.

13. Drilling equipment shall use rotary drilling methods, consisting of a drill bit and an open–ended casing. Potable water shall be used as the drilling fluid.

14. Install isolation casing as shown on drawing DDP–F1.31. Isolation casing shall have a minimum inner diameter of 16–3/4 inches and a minimum wall thickness of 3/8 inches.

15. Soils shall be removed from within the casing (internal flush) using reverse circulation methods, i.e. keeping the wash water return inside the casing. Flushing that results in circulation outside of the casing will not be permitted.

16. Collect and contain all drill spoils and fluids; treat spoils as if they are contaminated with hexavalent chromium and manage spoils in accordance with Material Handling and Management Plan (MHMP).

17. Advance casing to minimum embedment into the weathered rock as shown on drawings. Advance the rock socket beyond the tip of the casing to install the bond zone.

18. When drilling below the water table, the casing shall be kept full of water at all times to create a positive hydrostatic pressure to provide a stable bottom. Use of forced air to advance casing or remove spoils from inside casing will not be permitted.

19. Minipile installation methods shall be employed which do not compromise the lateral capacity of the minipiles by leaving an annulus outside the casing or by disturbing the soil/rock strata outside the casing. Any annulus that develops shall be filled with grout.

20. Prior to installing reinforcing, flush mini–pile clean with water to the satisfaction of the Foundation Engineer. If the drilled hole cannot be flushed clean, grout close and re–drill the pile at no cost.

21. Minipiles shall be installed within 2 inches of the plan location. Minipiles shall not be out of plumb by more than 2 percent. The Foundation Engineer will review the as–built locations and verticality submitted by the Contractor. Remedial measures resulting from out of tolerance construction shall be remediated at no cost.

22. Grout shall be placed by tremie method until clean uncontaminated grout flows from the top of the pile. The tremie pipe shall be initially placed within six (6) inches of the pile bottom; embed the tremie pipe a minimum of five (5) feet into grout at all times.

23. Minipiles shall be drilled and concreted in the presence of the Foundation Engineer. The Foundation Engineer will keep a record of each pile installed. The Contractor will provide information needed for the pile installation record.

Foundation Subgrade Notes:

1. Foundation subgrade immediately underlies the MMC or Soil Cap. For restoration of MMC, refer to requirements on drawings DAP–1. For restoration of Soil Cap, refer to requirements shown on Environmental Drawings.

2. Perform all excavation of foundation subgrade, subgrade preparation and backfill in the presence of the Foundation Engineer.

3. Soils at foundation subgrade are anticipated to consist of silty sands, crushed stone and various uncontrolled fill materials. Expose foundation subgrades for a minimum amount of time before reconstruction the MMC and Soil Cap, sealing with a concrete mudmat and pouring concrete for foundations. The Contractor shall prevent water from accumulating in excavations and protect subgrades from freezing weather.

4. Protect subgrade soils from unnecessary softening and disturbance due to construction operations including wetting and freezing. Where subgrade soils are loose or become weakened or disturbed: Over–excavate, compact bottom and replace over–excavation with each layer of MMC or Soil Cap. Sacrificial lifts of fill may be necessary to protect subgrade.

5. Prepare final foundation subgrade that conforms to International Building Code Soil Class 4 (1 tsf). Obtain approval of final subgrade from the Foundation Engineer prior to reconstructing MMC or Soil Cap. Obtain acceptance of MMC and Soil Cap reconstruction prior to placement of mud mat, erecting reinforcing steel or placing form work for foundations.

Foundation Concrete:

1. All concrete work shall be in accordance with the latest edition of ACI 318, "Building Code Requirements for Structural Concrete."

2. Concrete shall be air–entrained stone concrete (see note 16 below) with a minimum compressive strength (f'c) of:

   a. 4000 psi at 28 days for concrete protective slab, grade beams, shallow spread footings, pile fill and retaining walls
   b. 8000 psi at 28 days for all pile caps
   c. 6000 psi at 28 days for the concrete bridge slab
   d. 8000 psi at 28 days for concrete pile supported platform

3. The cement used shall be Type II Portland Cement. Potable water shall be used. Aggregates used shall meet the requirements of ASTM C33 and maximum size shall be 3/4 inch.

4. Concrete shall have a maximum water–cementitious material ratio of 0.40. The slump shall be between 3 and 5 inches (without water reducers or plasticizers).

5. Concrete shall contain an approved admixture to provide 6% plus or minus 1% air entrainment.

6. All admixtures used shall conform to ASTM C494 and be approved by the Foundation Engineer. Admixtures containing chemical chlorides shall not be used.

7. Concrete mix shall be designed by the contractor in accordance with the ACI Manual of Concrete Practice and submitted to Foundation Engineer for approval. The submittal shall include:

   a. Compressive strength testing and of the proposed mix;
   b. Aggregate type and source, refer to Earthwork requirements for clean source certification. Aggregate used in foundation concrete shall be resistant to weathering and have a crushing strength similar to hard granitic gneiss. Limestone from the Texas Quarry source shall not be used in foundation concrete or floor slabs.

8. Concrete reinforcing steel:

   a. For Concrete Bridge Slab and Concrete Protective Slab, reinforcing steel shall be deformed billet steel conforming to ASTM A615, Grade 60.
   b. For the Wills Street retaining walls, pile caps, grade beams and footings, reinforcing steel shall be deformed epoxy coated billet steel conforming to ASTM A775, Grade 60.

9. Development and splice lengths for reinforcing steel shall be based on latest edition of ACI 318, Building Code Requirement for reinforced concrete. Reinforcement splices shall be tension lap splices Class B.

10. Unless noted otherwise, minimum concrete clear cover to reinforcing bars shall be 1.5 inch. For concrete placed against earth, concrete clear cover shall be 3 inches.

11. All exposed concrete corners shall have a minimum of one inch chamfer, cut at 45 degrees.

12. Expansion joint filler shall be pre–molded.

13. Contractor shall prepare and submit reinforcing shop drawings to Foundation Engineer for approval before material procurement and fabrication.

14. Concrete samples shall be collected by a certified testing facility and compressive strength tests performed at 7 days, 14 days, and 28 days. One set of samples shall be collected for each 50 cubic yards of concrete placement or a minimum of one set of samples per day. Include two sets of spare samples with each batch collected in case further testing (at 56 day and 90 day) is required.

15. No equipment or superimposed load is to be set on concrete foundations and slabs without written acceptance of the 7, 14 & 28 day concrete compressive strength test results by the Foundation Engineer.

16. Mud Mat – shall be a sand–cement mortar mix that is workable. The suggested proportions are 1:3:6 with a minimum of 250 lbs cement for 1 cubic yard of concrete and a water to cement ratio of 0.6. Contractor to submit a mix design and lab test results for review of the Foundation Engineer.

Sheet Pile Notes (for sheet pile barrier wall):

1. Steel sheeting for sheet pile barrier shall be installed prior to installation of any sheet pile or foundation driven piles within 30 feet of the existing soil–bentonite hydraulic barrier.

2. Sheet piles are intended as a hydraulic barrier.

3. Lay out barrier centerline by optical survey prior to sheet pile barrier installation. The sheet piles are located with respect to the existing barrier centerline. Working points shown shall be verified for accuracy in the field. Any discrepancies shall be brought to the attention of the Developer and Engineer. Sheet pile installation shall not start prior to resolution of the working points.

4. All sheet piles:

   a. Sheet pilles shall be AZ12–770.
   b. Shall be heavy gage hot–rolled sheet piling and shall conform to ASTM A 572/A 572M, Grade 50 and of the size shown on drawings. The interlock of sheet piling shall be free–sliding, allow a swing angle of at least 5 degrees when threaded and maintain continuous interlocking when installed. Sheet piling shall be full–length sections of the dimensions shown.
   c. Shall be provided in pairs, with the pair interlock full length seal welded. Steel straps are recommended to prevent spreading during driving.
   d. Shall be provided with interlock sealant in the trailing interlock of each pair for full length of sheet pile.
   e. Shall be provided with centralizers at a maximum spacing of 20 feet along the length of the sheet pile.

5. Fabrication:

   a. Sheet pile pairs will be shop seal welded in a horizontal position. Welding procedures, including electrode classification and required preheat temperature, shall be in conformance with AWS D1.1, latest edition. Welders and welding operators shall be qualified by applicable tests as described by AWS D1.1.
   b. All welds shall receive a 100% visual examination by a qualified inspector.

6. The verticality of the sheet piles shall not deviate from plumb during placement. Plan location shall be within 3 inches of theoretical.

7. Handle steel sheet piling using handling holes or lifting devices. Handle steel sheet piles with care to prevent damage. Support on level blocks or racks spaced not more than 10 feet apart and not more than 2 feet from the ends. Supports between multiple lifts shall be in a vertical plane. Protect steel sheet piling to prevent corrosion prior to installation.

8. Pile hammer: Use a pile hammer having a delivered force or energy suitable for the total weight of the pile and the character of Soil Bentonite hydraulic barrier material to be encountered. Operate hammer at the rate(s) recommended by the manufacturer throughout the entire driving period. Repair any damage to piling caused by use of the pile hammer.

9. Pile Protection: Use a protecting cap during driving to prevent damage to the top of the sheet piling.

10. Drive templates:

   a. Prior to driving, provide template or driving frame suitable for aligning, supporting and maintaining sheet piling in the correct position during setting and driving.Use a system of structural framing sufficiently rigid to resist lateral and driving forces and to adequately support the sheet piling until design tip elevation is achieved.
   b. Templates shall not move when supporting sheet piling. Fit templates with wood blocking to bear against sheet piles and hold the sheet pile at the design location alignment. Provide outer template straps or other restraints as necessary to prevent the sheets from warping or wandering from the alignment, or racking along the alignment. Template shall be designed such that it rests on grade. Use of piles to support the template is not permitted. The template shall be two sided.

11. Sheet piles completed and driven to final tip elevation may be welded to adjacent completed sheets if required to limit movement of completed sheets.

12. Drive sheet piles to the minimum tip elevation(s) shown on the drawings.

13. Do not drive steel sheet piles until debris, concrete, membranes, and other materials have been removed that may interfere with steel sheet pile driving. See Environmental drawings for resolution of conflicts with existing instrumentation.

14. Cutting and splicing:

   a. Piles driven below the required tip elevation and piles damaged by driving and cut off to permit further driving shall be extended as required to reach the top elevation by splicing as approved by the engineer.
   b. Ends of piles to be spliced shall be squared before splicing to eliminate dips or camber. Splice piles with concentric alignment of the interlocks.
   c. Spliced piles shall be free sliding and able to obtain the maximum swing with contiguous piles.
   d. Splices shall develop the full structural strength of the member.

15. Welding: shop and field welding for splicing and other conditions, qualification of welding procedures, welders, and welding operations shall be in accordance with AWS D1.1.

16. Remove and replace steel sheet piles found to be out of interlock, out of tolerance, damaged or otherwise deficient.

17. Provide Work Plan with Decontamination Procedure to Developer for Approval prior to extraction.

18. Trim the tops of piles as needed after driving. Use a straight edge in cutting by burning to avoid abrupt nicks. Steel Sheet Pile cut–offs shall become the property of the Contractor and shall be removed from the site.

Sealed Sheet Pile Interlocks (for sheet pile barrier wall):

1. Material – Wadit or approved equal shall be:

   a. As manufactured by PilePro, Austin, TX. Sealant, install in accordance with the manufacturer's instructions, or below, whichever is more stringent.
   b. Wadit has been tested for compatibility with site groundwater. Any alternates submitted are subject to comprehensive testing and approval by the Foundation Engineer, Owner, Honeywell, USEPA, and MDE.

2. Sealant application:

   a. Steel surface and interlock void to receive sealant shall be free of oil, moisture, soil, metal shavings, or other contaminants.
   b. Apply sealant and allow to dry cure 72 hours or more prior to driving. Surface temperature shall be above 45F for 24 hours prior and 48 hours after application.

3. Quantity:

   a. Completely fill interlock space.
   b. After air drying, interlocks with sealant applied shall be covered during storage and transport; cover shall remain in place until the pile is lifted for placement. Prior to transport, flip sheets so water is unable to puddle within interlock. Sheets shall remain in this orientation until lifted for placement.
   c. Any holes in the sheets (lifting hole, etc.) below finished grade shall be covered with plate steel and seal welded.

4. Protect sealant from exposure to heat, wetting, mechanical damage, or other environmental damage;

5. Verify sealant integrity, attachment to sheet, and cleanliness of sealant surface prior to driving sheet.

6. Sheet pile installation:

   a. The bottom of each clear interlock shall be plugged to prevent soil entry during driving. Interlock plug shall be tight fitting and secured in place to prevent loss during handling and placement. If the interlock plug is longer than 2", it shall be knocked out/displaced by adjacent sheet.

   b. Upon acceptance of sheet pile, cutoff sheet pile a minimum of 12 inches below existing grade of Geomembrane. Upon completion of driving sheeting, where surface of soil–bentonite barrier has settled below El. 7 along Wills St., backfill with replacement soil–bentonite backfill as shown on Dwg. F1.01 Earthwork notes to the required elevation. For restoration of Soil Bentonite Barrier, refer to Drawing F1.01 Earthwork Notes. For restoration of MMC, refer to Drawing F1.03.

Submittals

Foundation Driven Piles and Sheet Piles:

1. The contractor shall develop and submit a work plan for both Sheet Piles and foundation Piles which shall consist of:

   a. Construction sequence.
   b. Description of means and methods of construction.
   c. Description of equipment to be used to perform the work.
   d. Safety controls for pile driving equipment material use and containment.
   e. Proposed staging and laydown area.

2. Equipment Data: Submit complete description of each pile hammer for driving steel Sheet Piles and Foundation Piles, including operational characteristics, rated energy, date of purchase, and date and description of last overhaul. Include data for driving helmets and templates, cap blocks, and pile cushions. Descriptive information shall include manufacturer's name, model numbers, and capacity.

3. Pile Identification Plan: Prior to any pile driving submit a pile identification plan showing pile locations, cut–off elevations, and pile numbering system for both Foundation Piles and Sheet Piles.

4. Piles As–built Location Survey Plan on a weekly basis for the piles completed during that week.

5. Sheet Pile Driving Template: Submit drawings or a detailed description of driving template demonstrating conformance to the drawings.

6. Steel Sheet Piles and foundation piles: Submit shop drawings for approval prior to start of the work or ordering materials. Include details of top protection, sealant, cut–off method(s), etc. Include:

   a. Shop drawings for piling, including fabricated sections, shall show complete dimensions including minimum section properties and details of steel piling and the driving sequence and location of steel piling.
   b. Include details of the method of handling piling to prevent permanent deflection, distortion, or damage to steel Sheet piling interlocks.
   c. Proposed sequence for driving Piles.
   d. Proposed procedure for splicing steel Piles, including a plan for positioning all field and shop splices and detailed procedures for performing field splices
   e. Work Plan with Pile pulling method and Decontamination Procedure

7. Material Certificates: Certified steel material mill test reports for steel pile material and Foundation Pile material. Submit for each shipment identified with specific lots prior to installation. Identification data should include piling type, dimensions, chemical composition, mechanical properties, section properties, heat number, and mill identification mark. Cross referencing between field shipments and stored materials and the submitted material certificates must be made, by referencing heat numbers, mill ID marks, etc., on each truck delivery ticket and on individual field tags, etc.

8. Submit welder certifications. All welders shall be certified as required by AWS D1.1.

9. Seal weld inspection record for each Sheet Pile pair and conical tip seal weld for each foundation pile; certify seal welds prior to delivery to site.

10. Sealant application, verify temperature for 24 hour prior to sealant application through 48 hours after sealant application. Verify application rate and curing time; certify sealant application prior to driving Sheet Piles.

11. Prepare and Submit "As–built" Record Drawings showing Pile locations and plumbness for both Sheet Piles and Foundation Piles.

Drilled Pile Submittals:

1. Three or more weeks before minipile drilling, submit to the Foundation Engineer for review and approval:

   a. List of three previous projects on which the Contractor has successfully performed this type of construction where drill fluids are collected for disposal. Include information on the nature of the work and identify contact persons.
   b. Shop drawings showing mini–pile layout, size, numbering, and installation procedure and sequence. Description and catalog cuts of equipment to be used.
   c. Product data for threaded bar reinforcing.
   d. Details of all connections, anchorages, and splices of the reinforcing steel and casing.
   e. Certified mill test reports for steel casing.
   f. Name of independent grout testing laboratory.
   g. Grout mix design, including compressive strength test data for three (3), seven (7), and twenty–eight (28) day test specimens, and grout cube breaks for same.
   h. Work plan for advancement of Minipiles that demonstrates conformance with the requirements shown hereon and the requirements of the Materials Handling, and Management Plan, including a shop drawings showing the means and methods for sealing casing through the Soil Cap and containment of drill spoils.

2. During and at completion of pile installation, submit to the Foundation Engineer:

   a. Compressive strength test results of grout cube samples to be submitted one (1) day after completion of tests.

Foundation Concrete:

1. Submit Rebar Shop Drawings for all Reinforced Concrete Work detailed in the drawings for review and approval prior to material order or fabrication.

2. Rebar Mill Certifications.

3. Concrete mix design including admixtures used for structural concrete for all the structures and for mud mat.

4. Certified concrete testing facility qualifications.

5. Concrete and grout strength results from tests performed at 7 days, 14 days, and 28 days.

6. Product or design data for crane with design calculations demonstrating less than 2 KSF bearing pressure imparted onto drainage net.

Inspection Submittals:

1. Submit Completed Pile Installation Records to the Developer for Record.

2. Submit Daily Field Reports to the Developer on a regular basis.

Sheet Pile and Foundation Pile Quality Assurance/Quality Control:

1. All piles shall be installed under the continuous inspection of the Foundation Engineer or his representative. General Contractor shall inspect all piles for compliance with tolerance requirements by means of survey. All survey information shall be submitted to the Foundation Engineer for review and approval.

2. Foundation Engineer shall prepare driving logs for each Sheet Pile and Foundation Pile. Driving records shall consist of pile identification number, type, size, and length of pile, pile hammer used, hammer speed and pressure, splice locations and type, tip and cut off elevations, plumbness checks before and after driving, driving resistance per foot, date and time of driving, and any unusual occurrences. Records shall be submitted to the owner after completion of project. Copies of pile driving logs, notes and daily field reports shall be made available for inspection by the owner.

   a. Inspect sheet pile interlocks periodically. Contractor may be required to pull selected steel sheet piles after driving to determine the condition of the underground portions of the sheet piles. Contract work shall include pulling and redriving/replacement of piles, if necessary, if any pile is found to be damaged.
   b. Remove and replace steel sheet piles found to be out of interlock at no additional cost to the Developer. The sheet pile pulling method must be approved by the Engineer.
   c. Any pile out of tolerance may be rejected. If rejected, it shall be replaced by another pile or piles, at locations specified by the Foundation Engineer.

Structural Design Loads (for items covered by F–Series Drawings)

1. Wills Wharf Office and Hotel foundation design is based on loads provided by Morris & Ritchie Associates, Inc. Towson, MD on October 28 and December 3, 2015. Pile Cap locations are based on column and shear wall layout provided by Beatty Harvey Coco Architects LLP, Baltimore MD on December 3, 2015.

2. Wills Street concrete retaining walls and Plaza Retaining Walls have been designed for lateral pressure from fill under roadway and traffic surcharge.

3. Concrete Bridge Slab is designed for HL–93 Wheel Loads with a minimum 8 inches of Fill over the slab.

4. Concrete Protective Slab is a non–structural protective concrete layer meant to provide protective cover to the synthetic layers.

BHC ARCHITECTS
BEATTY•HARVEY•COCO ARCHITECTS, LLP
NYC | LONG ISLAND | BALTIMORE
1300 Thames St., Suite 10, Baltimore, Maryland 21231
p: (410) 752-2759

developer
Beatty Development Group
1300 Thames Street, Suite 10
Baltimore, MD 21231
P 410-332-1100

structural engineer
Morris Ritchie & Associates, INC
1220-C East Joppa Road, Suite 505 INC
Towson, MD 21286
P 410-821-1690

mep engineer
JDB Engineering, Inc.
225 International Circle, Suite 102
Hunt Valley, MD 21030
P 410-771-3433

geotech / foundation engineer
Mueser Rutledge Consulting Engineer
225 West 34th St
New York, NY 10122
P 917-339-9300

civil engineer
Morris Ritchie & Associates, INC
14280 Park Center Drive, Suite A
Laurel, MD 20707
P 410-821-1690

landscape architect
Mahan Rykiel Associates
800 Wyman Park Drive, Suite 100
Baltimore, MD 21211
P 410-235-6001

environmental engineer
ERM Group, Inc
200 Harry S Truman Parkway Suite 400
Annapolis, MD 21401
P 410-266-0006

interior designer
Brayton Hughes Design Studios
465 California Street, Suite 350
San Francisco, CA 94104
P 415-343-6108

food service
Cini Little International, Inc
20251 Century Blvd., Suite 375
Germantown, MD 20874
P 301-528-9700

lighting
Grenald Waldron Associates
260 Haverford Avenue, PO Box 525
Narberth, PA 19072
P 610-667-6330

landscape architect
Core Studio Design
1817 Bolton Street
Baltimore, MD 21217
P 410-878-7532

fire protection engineer
Jensen Hughes
3610 Commerce Drive, Suite B17
Baltimore, MD 21227
P 410-737-8677

DETAILED DEVELOPMENT PLAN
(SEPTEMBER 16, 2016)

key

NORTH

project
WILLS WHARF OFFICE/HOTEL

HARBOR POINT
BALTIMORE, MARYLAND

seal

issued	date	description

title
GENERAL AND TECHNICAL NOTES

drawn by:	E.C.
checked by:	G.S.
scale:	NONE
project number:	MRCE - 12582
sheet number	scaled inch

DDP-F1.02

Tuesday, Sep 20, 2016 – 02:33:44 PM
© Beatty Harvey Coco Architects, LLP
Eugina Cherkasskaya G:\DWGS\125\12582\DDP-F1.02.dwg

Last saved by: echerkasskaya on Tuesday, Sep 20, 2016 – 1:51:58 PM
4/29/2016 1:59:27 PM

Instrumentation and Monitoring Notes:

Pre-Construction Condition Survey:

1. Perform a pre-construction condition survey documenting existing conditions of the Thames Street Wharf Building shall be performed prior to site preparation and pile installation. Submit survey to the Developer for review a minimum of 10 work days prior to the start of construction.

Optical Survey:

1. Masonry Survey Nails (PK Nails) shall be placed at each corner of vaults V-3, V-4, and V-5.

2. Survey of ground surface above existing soil-bentonite hydraulic barrier is not required after steel sheet sheet pile is installed to augment barrier. Place and survey PK Nails at 25 ft. spacing above barrier centerline if sheet pile is not installed.

3. Baseline reading shall consist of at least three consistent survey readings of each monitoring point prior to demolition or pile installation. Survey monitoring points daily when driving piles within 100 ft. of survey point. Take final reading after all piles within 100 ft. have been installed. Provide reading table computing vertical movement within 24 hours of each survey. Increased frequency of reading may be required depending on data trends.

4. A "threshold value" of 0.125 inches settlement and a "limiting value" of 0.25 inches settlement shall be established.

Crack Gage Monitoring:

1. Install and baseline crack monitoring gages on any cracks observed on the inside walls or floor of the Thames Street Wharf Office Building, Exelon Plaza Garage, or new construction of the Point Street Apartments. Three baseline readings shall be taken prior to demolition or pile installation within 100 feet.

2. Record outside temperature, and time of reading daily during pile installation.

3. Provide data to Foundation Engineer within 24 hours of reading.

4. A "threshold value" of 1 mm and a "limiting value" of 2 mm shall be established.

Vibration Monitoring:

1. Provide calibrated seismograph tri-axial geophones and monitor vibrations (peak particle velocity and frequency) when pile driving occurs within 50 feet of the following structures:

   a. Plaza Garage Structure (Exelon)
   b. Point Street Apartments (Under Construction)
   c. Thames Street Wharf
   d. Existing Vaults

2. Vibration monitoring at ground surface above existing soil-bentonite hydraulic barrier is not required after steel sheet pile is installed to augment barrier.

3. The Geophones monitoring the Thames Street Wharf building and the vault shall be sandbagged on to the ground surface directly adjacent to the structures. Sandbag shall be filled with loosely filled material such as sand. The sandbag should be as low and wide as possible with maximum amount of firm contact with the ground.

4. Seismographs shall be installed and monitored one hour prior to pile installation daily. Seismographs shall record vibrations continuously during periods of all pile driving activity.

5. Seismographs shall be capable of recording peak particle velocity and frequency as 1 minute histograms and provide full waveforms for events above threshold limits.

6. Seismographs shall be equipped with a wireless broadband modem which enables remote communication with the seismograph and allows automatic alerts to designated field personnel when vibrations exceed the pre-established threshold value.

7. A "threshold value" of 1.0 in/sec and a "limiting value" of 2.0 in/sec shall be established for the hydraulic barrier and vault. A "threshold value" of 0.5 in/sec and a "limiting value" of 1.0 in/sec shall be established for the Transfer Station tank pad and mechanical room.

Exceedances:

1. If the displacement of any monitoring point exceeds the "threshold value" during pile installation the Engineer, Pile Driving Contractor, Construction Manager, Developer and approved third parties shall be notified and the pile installation method shall be modified to prevent further exceedance.

2. If the displacement of any monitoring point exceeds the "limiting value" during pile installation the Engineer, Pile Driving Contractor, Construction Manager, Developer and approved third parties shall be notified. Stop pile driving and revise methods. Inspect condition of structures (see Crack Gage Monitoring Item 1 above). Seal any new or opened cracks in Tank Pad with epoxy grout when pile driving is completed within 100 feet and before tanks are used for production storage.

Submittals:

Surveyors:

1. Provide name and qualifications of Surveyor licensed in the state of Maryland.
2. Provide a Plan Drawing showing locations and ID of the benchmark/control points and monitoring points.

3. Provide a table giving the x, y, and z coordinates of optical monitoring points within 24 hours of survey. Increased frequency of reading may be required depending on data trends. Submit table weekly to the Developer for review.

Vibration Monitoring Contractor:

1. Provide name and qualifications of the Vibration Monitoring Contractor. Submit qualifications of the Contractor demonstrating performance of at least 5 projects of similar scope within 5 years.

2. Provide a resume for the technician indicating at least 3 years' experience in the field of engineering and construction monitoring.

3. Provide a summary report of vibration readings giving distance of seismograph from pile driving and Pile ID for each record.

BHC ARCHITECTS
BEATTY•HARVEY•COCO ARCHITECTS, LLP
NYC | LONG ISLAND | BALTIMORE
1300 Thames St., Suite 10, Baltimore, Maryland 21231
p: (410) 752-2759

developer
Beatty Development Group
1300 Thames Street, Suite 10
Baltimore, MD 21231
P 410-332-1100

structural engineer
Morris Ritchie & Associates, INC
1220-C East Joppa Road, Suite 505 INC
Towson, MD 21286
P 410-821-1690

mep engineer
JDB Engineering, Inc.
225 International Circle, Suite 102
Hunt Valley, MD 21030
P 410-771-3433

geotech / foundation engineer
Mueser Rutledge Consulting Engineer
225 West 34th St
New York, NY 10122
P 917-339-9300

civil engineer
Morris Ritchie & Associates, INC
14280 Park Center Drive, Suite A
Laurel, MD 20707
P 410-821-1690

landscape architect
Mahan Rykiel Associates
800 Wyman Park Drive, Suite 100
Baltimore, MD 21211
P 410-235-6001

environmental engineer
ERM Group, Inc
200 Harry S Truman Parkway Suite 400
Annapolis, MD 21401
P 410-266-0006

interior designer
Brayton Hughes Design Studios
465 California Street, Suite 350
San Francisco, CA 94104
P 415-343-6108

food service
Cini Little International, Inc
20251 Century Blvd., Suite 375
Germantown, MD 20874
P 301-528-9700

lighting
Grenald Waldron Associates
260 Haverford Avenue, PO Box 525
Narberth, PA 19072
P 610-667-6330

landscape architect
Core Studio Design
1817 Bolton Street
Baltimore, MD 21217
P 410-878-7532

fire protection engineer
Jensen Hughes
3610 Commerce Drive, Suite 817
Baltimore, MD 21227
P 410-737-8677

DETAILED
DEVELOPMENT PLAN
(APRIL 29, 2016)

key

NORTH

project

WILLS WHARF
OFFICE/HOTEL

HARBOR POINT
BALTIMORE, MARYLAND

seal

issued	date	description

title

GENERAL AND TECHNICAL NOTES

drawn by:	E.C.
checked by:	G.S.
scale:	NONE
project number:	MRCE - 12582
	scaled inch

sheet number

DDP-F1.03

Tuesday, Sep 20, 2016 – 02:33:47 PM
© Beatty Harvey Coco Architects, LLP
Eugina Cherkasskaya G:\DWGS\125\12582\DDP-F1.03.dwg

Last saved by: echerkasskaya on Wednesday, Apr 27, 2016 – 9:01:42 AM
4/26/2016 1:50:27 PM

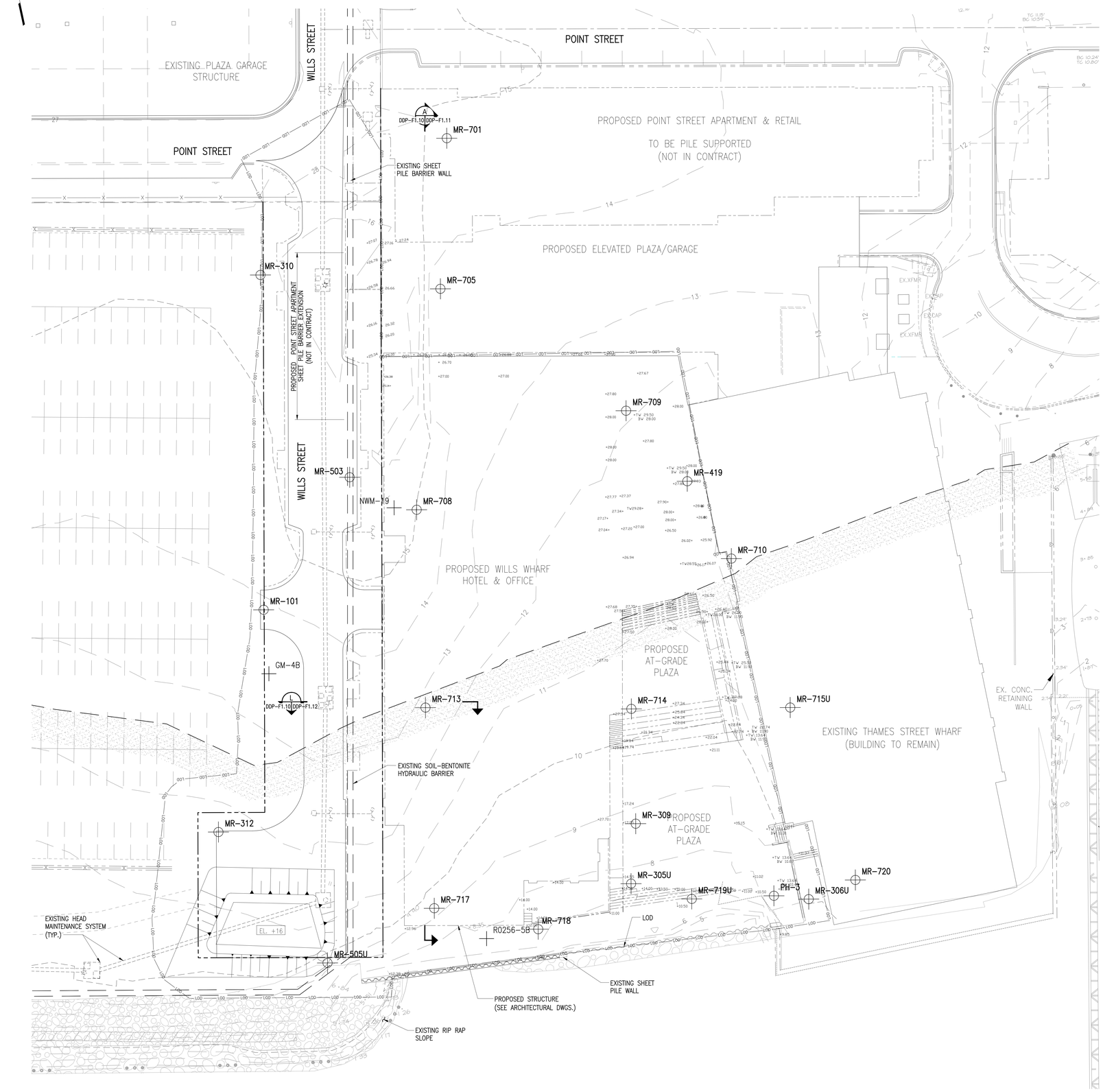

P L A N

GRAPHIC SCALE

20' 10' 0 20' 40'

General Notes:

1. For General and TechnicaL notes, see drawings DDP–F1.01, DDP–F1.02 and DDP–F1.03.
2. Borings shown are those which are within 50 feet of proposed development and extend into or through Stratum M.
3. Borings identified with the prefix "MR–" were drilled under inspection of MRCE. Other borings are available. MRCE makes no representation as to the accuracy of borings by others.
4. Limits of compressible stratum shown are based on widely spaced borings and historical shoreline information and as such are approximate. Actual conditions may vary.

References:

Reports by MRCE:

1. "Summary of the 1988 Subsurface Investigation for Perimeter Cutoff Wall Evaluation," Mueser Rutledge Consulting Engineers, New York, New York 1988.
2. "Condition Survey of Waterfront Structures," Mueser Rutledge Consulting Engineers, New York, NY 1990.
3. "Summary of the 1989–1990 Subsurface Investigation for Perimeter Embankment and Cut–Off Wall Design," Mueser Rutledge Consulting Engineers, New York, New York 1990.
4. "Existing Subsurface Structures Review and Documentation," Mueser Rutledge Consulting Engineers, New York, New York 1992.
5. "Summary of Subsurface Information Along the Hydraulic Barrier," Mueser Rutledge Consulting Engineers, New York, New York 1994.
6. "Geotechnical Data Report Harbor Point Areas 2 and 3 – Philpot and Block Sts Between Wills & Thames," Mueser Rutledge Consulting Engineers, New York, New York 2006.

Reports by Others:

7. "Baltimore Works Remedial Investigation Report," NUS Corporation, Gaithersburg, Maryland 1986.
8. "Summary of Aquifer Testing Completed at the Baltimore Works," Geraghty and Miller, Annapolis, Maryland 1989.
9. "Corrective Measures Implementation Report: Phase I Construction," Black and Veatch Waste Science Technology, Philadelphia, Pennsylvania 1993.
10. "Sidney Meyer Property Investigation Results," Black and Veatch Waste Science Technology, Philadelphia, Pennsylvania 1993.
11. "Construction Completion Report, Phase II: Soil–Bentonite Hydraulic Barrier Wall and Phase III: Final Remedial Construction," Black and Veatch Waste Science Technology, Philadelphia, Pennsylvania 2000.

Surcharge Notes:

1. For Details of Surcharge Fill 2 see Phase II Construction Completion Report prepared by Black & Veatch dated February 2000.
2. Fill area extents as shown by hatching with slopes graded between 2H:1V and 1H:1V.
3. Surcharge Fill Placement: Placed to surcharge Baltimore City Pier at the foot of Wills Street.
4. Strip Drains were installed with a triangular spacing at approximately 5'.

Legend:

MR–101 – Borings made in previous MRCE subsurface investigations

– Borings made by others

Area where organic deposits encountered

Approximate limits of organic deposits encountered in borings

11 – Existing ground surface elevation

EL. ... – Elev. Historic of Surcharge

Top of slope

Toe of slope

BHC ARCHITECTS
BEATTY•HARVEY•COCO ARCHITECTS, LLP
NYC | LONG ISLAND | BALTIMORE
1300 Thames St., Suite 10, Baltimore, Maryland 21231
p: (410) 752-2759

developer
Beatty Development Group
1300 Thames Street, Suite 10
Baltimore, MD 21231
P 410-332-1100

structural engineer
Morris Ritchie & Associates, INC
1220-C East Jappa Road, Suite 505 INC
Towson, MD 21286
P 410-821-1690

mep engineer
JDB Engineering, Inc.
225 International Circle, Suite 102
Hunt Valley, MD 21030
P 410-771-3433

geotech / foundation engineer
Mueser Rutledge Consulting Engineer
225 West 34th St
New York, NY 10122
P 917-339-9300

civil engineer
Morris Ritchie & Associates, INC
14280 Park Center Drive, Suite A
Laurel, MD 20707
P 410-821-1690

landscape architect
Mahan Rykiel Associates
800 Wyman Park Drive, Suite 100
Baltimore, MD 21211
P 410-235-6001

environmental engineer
ERM Group, Inc
200 Harry S Truman Parkway Suite 400
Annapolis, MD 21401
P 410-266-0006

interior designer
Brayton Hughes Design Studios
465 California Street, Suite 350
San Francisco, CA 94104
P 415-343-6108

food service
Cini Little International, Inc
20251 Century Blvd., Suite 375
Germantown, MD 20874
P 301-528-9700

lighting
Grenald Waldron Associates
260 Haverford Avenue, PO Box 525
Narberth, PA 19072
P 610-667-6330

landscape architect
Core Studio Design
1817 Bolton Street
Baltimore, MD 21217
P 410-878-7532

fire protection engineer
Jensen Hughes
3610 Commerce Drive, Suite 817
Baltimore, MD 21227
P 410-737-8677

DETAILED DEVELOPMENT PLAN
(APRIL 29, 2016)

key

NORTH

project
WILLS WHARF OFFICE/HOTEL

HARBOR POINT
BALTIMORE, MARYLAND

seal

issued	date	description

title
BORING LOCATION PLAN

drawn by:	E.C.
checked by:	A.M.D.
scale:	AS SHOWN
project number:	MRCE - 12582
	scaled inch

sheet number
DDP-F1.10

Tuesday, Sep 20, 2016 – 02:34:03 PM
© Beatty Harvey Coco Architects, LLP
Eugina Cherkasskaya G:\DWGS\125\12582\DDP-F1.10.dwg

Last saved by: echerkasskaya on Wednesday, Apr 27, 2016 – 9:07:47 AM
4/26/2016 1:59:27 PM

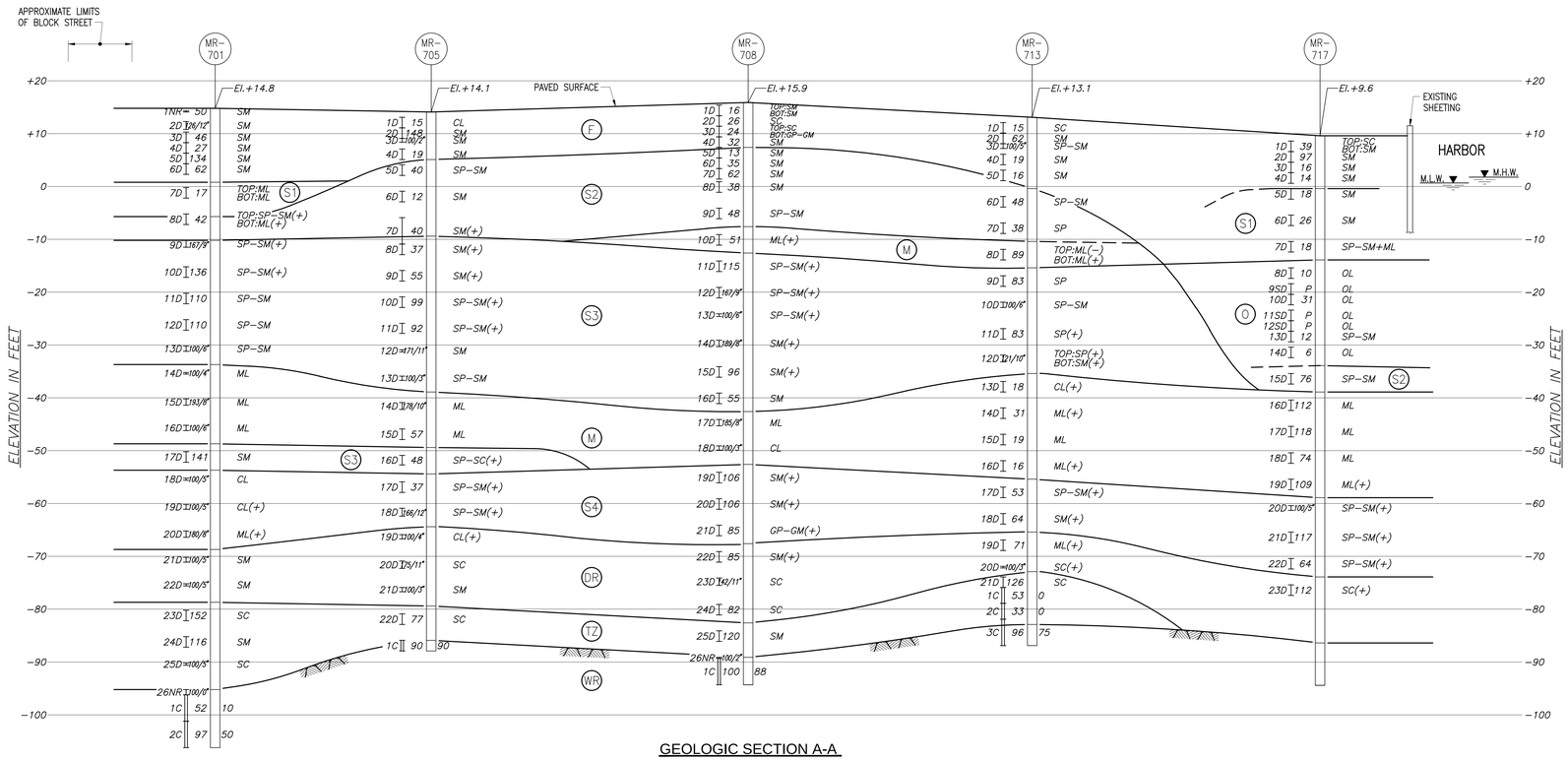

GEOLOGIC SECTION A-A

NOTES:

1. For boring locations and additional notes, see Drawing DDP-F1.10.
2. Stratification shown are necessary interpolations between borings. Actual subsurface conditions will vary.
3. Project datum is Baltimore County and City Datum (BCCD), which equals –0.811 on NGVD.

LEGEND

(+) –Indicated positive reaction to DPC

GENERAL STRATA DESCRIPTIONS:

(F) **FILL** – Compact red–brown to gray silty fine to coarse SAND, gravel and cinders. may consist of clay and silt, construction debris, oyster shells, wood, coal, ore tailings, and other miscellaneous materials.

(O) **BLACK ORGANIC SILTY CLAY** – Soft black organic silty clay to clayey silt, trace fine sand, wood.

(S1) **GRAY SILTY FINE SAND** – Loose to compact dark gray silty fine sand, to fine sand trace to some silt, and containing a trace of mica and organic matter.

(S2) **GRAY SAND** – Compact gray to fine to coarse sand, trace to some gravel, trace silt. Found outboard of the original shoreline. Green and yellow coloration may be present, presumably due to the presence of chromium.

(M) **WHITE CLAYEY SILT** – Very compact white clayey silt, some fine sand, to sandy silt. in some areas, consists of a hard mottled white and red brown silty clay, trace sand. red–brown materials exhibit higher plasticity than the white.

(S3) **WHITE SILTY SAND** – Very compact white to light gray–brown fine to medium sand, some silty, and silty fine sand. yellow to yellow–green coloration present in some areas, presumably due to the presence of chromium.

(S4) **WHITE SAND AND GRAVEL** – Very compact white to light gray–brown fine to medium sand, some silty, and silty fine sand. yellow to yellow–green coloration present in some areas, presumably due to the presence of chromium.

(DR) **DECOMPOSED ROCK** – Yellow–brown clayey fine to coarse sand. relict rock structure visible in some samples.

(TZ) **TRANSITION ZONE** – White fine to coarse sand within a white clayey silt matrix, and gray–green and brown fine to coarse sand, trace to some silt.

(WR) **WEATHERED ROCK** – Intermediate to medium hard, highly weathered to slightly weathered, gray and green gray gneiss, jointed to blocky.

GRAPHIC SCALE

VERTICAL 10' 5' 0 10' 20'

HORIZONTAL 20' 10' 0 20' 40'

BHC ARCHITECTS
BEATTY•HARVEY•COCO ARCHITECTS, LLP
NYC | LONG ISLAND | BALTIMORE
1300 Thames St., Suite 10, Baltimore, Maryland 21231
p: (410) 752-2759

developer
Beatty Development Group
1300 Thames Street, Suite 10
Baltimore, MD 21231
P 410-332-1100

structural engineer
Morris Ritchie & Associates, INC
1220-C East Jappa Road, Suite 505 INC
Towson, MD 21286
P 410-821-1690

mep engineer
JDB Engineering, Inc.
225 International Circle, Suite 102
Hunt Valley, MD 21030
P 410-771-3433

geotech / foundation engineer
Mueser Rutledge Consulting Engineer
225 West 34th St
New York, NY 10122
P 917-339-9300

civil engineer
Morris Ritchie & Associates, INC
14280 Park Center Drive, Suite A
Laurel, MD 20707
P 410-821-1690

landscape architect
Mahan Rykiel Associates
800 Wyman Park Drive, Suite 100
Baltimore, MD 21211
P 410-235-6001

environmental engineer
ERM Group, Inc
200 Harry S Truman Parkway Suite 400
Annapolis, MD 21401
P 410-266-0006

interior designer
Brayton Hughes Design Studios
465 California Street, Suite 350
San Francisco, CA 94104
P 415-343-6108

food service
Cini Little International, Inc
20251 Century Blvd., Suite 375
Germantown, MD 20874
P 301-528-9700

lighting
Grenald Waldron Associates
260 Haverford Avenue, PO Box 525
Narberth, PA 19072
P 610-667-6330

landscape architect
Core Studio Design
1817 Bolton Street
Baltimore, MD 21217
P 410-878-7532

fire protection engineer
Jensen Hughes
3610 Commerce Drive, Suite B17
Baltimore, MD 21227
P 410-737-8677

DETAILED DEVELOPMENT PLAN
(APRIL 29, 2016)

key

NORTH

project
WILLS WHARF
OFFICE/HOTEL

HARBOR POINT
BALTIMORE, MARYLAND

seal

issued	date	description

title
GEOLOGIC SECTION A-A

drawn by:	E.C.
checked by:	A.M.D.
scale:	AS SHOWN
project number:	MRCE - 12582
	scaled inch

sheet number
DDP-F1.11

Tuesday, Sep 20, 2016 – 02:34:15 PM
© Beatty Harvey Coco Architects, LLP
Eugina Cherkasskaya G:\DWGS\125\12582\DDP-F1.11.dwg

Last saved by: echerkasskaya on Wednesday, Apr 27, 2016 – 9:08:59 AM
4/25/2016 1:50:27 PM

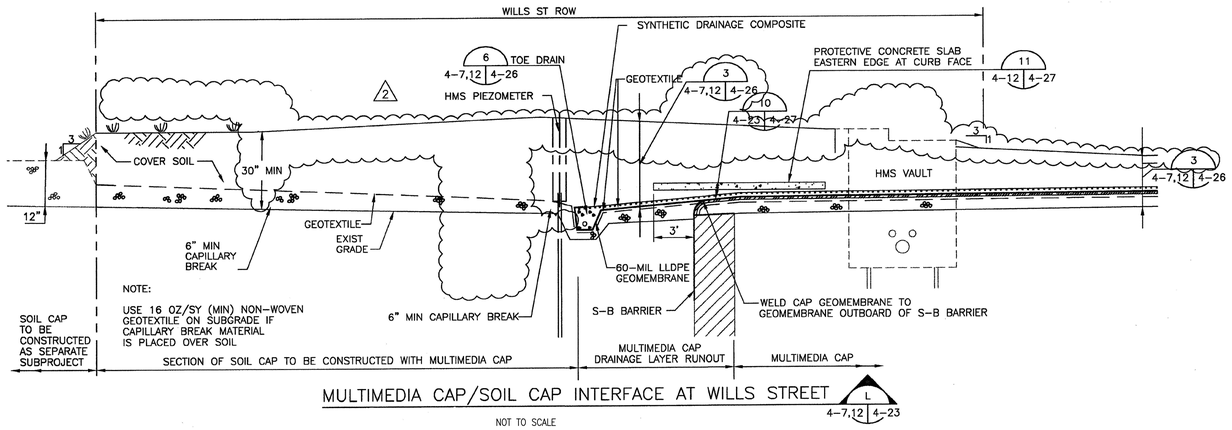

MULTIMEDIA CAP/SOIL CAP INTERFACE AT WILLS STREET (L) 4–7,12 4–23

NOT TO SCALE

NOTES:

1. As–built sections and details shown hereon were prepared by Black and Veatch as part of the "Construction Completion Report, Phase II: Soil–Bentonite Hydraulic Barrier Wall and Phase III: Final Remedial Construction," Black and Veatch Waste Science Technology, Philadelphia, Pennsylvania, 2000.

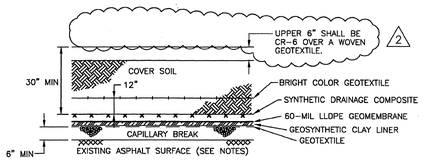

NOTES:

1. USE 16 OZ/SY (MIN) NON–WOVEN GEOTEXTILE ON SUBGRADE IF CAPILLARY BREAK MATERIAL IS PLACED OVER SOIL.
2. IF ELEVATION DIFFERENCE BETWEEN EXISTING SURFACE AND GEOMEMBRANE GRADE (DRAWING 0493, SHEET 4–7) IS GREATER THAN 6", PLACE FILL MATERIAL, IF AVAILABLE, OVER EXISTING SURFACE SO THAT FINAL CAPILLARY BREAK THICKNESS IS 6".

MULTIMEDIA CAP WITH CR–6 SURFACE (3) 4–7,12 4–26

NOT TO SCALE

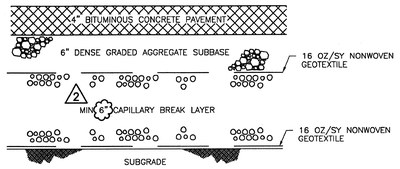

NOTE:

NO CHAIN LINK FENCE AND GATE SHALL BE CONSTRUCTED WITH THIS ALTERNATIVE.

SOIL CAP – ALTERNATIVE 4A – SELECTED PUBLIC SITE ACCESS PERMITTED (4) 5–3 5–4

NOT TO SCALE

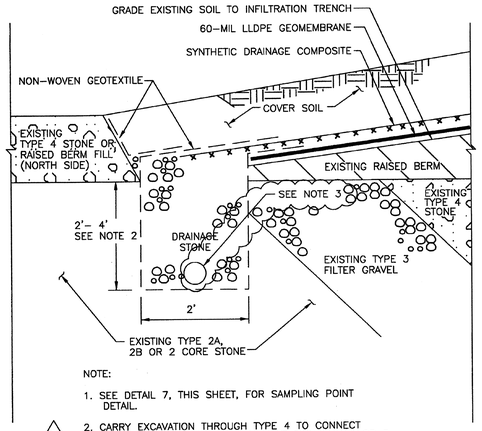

NOTE:

1. SEE DETAIL 7, THIS SHEET, FOR SAMPLING POINT DETAIL.
2. CARRY EXCAVATION THROUGH TYPE 4 TO CONNECT DRAINAGE STONE WITH EMBANKMENT TYPE 2, 2A, OR 3.
3. INSTALL 4" DIA PERFORATED HDPE ADS PIPE ALONG NORTH SIDE, EMBANKMENT ONLY.

PERIMETER INFILTRATION TRENCH (5) 4–7,12 4–26

NOT TO SCALE

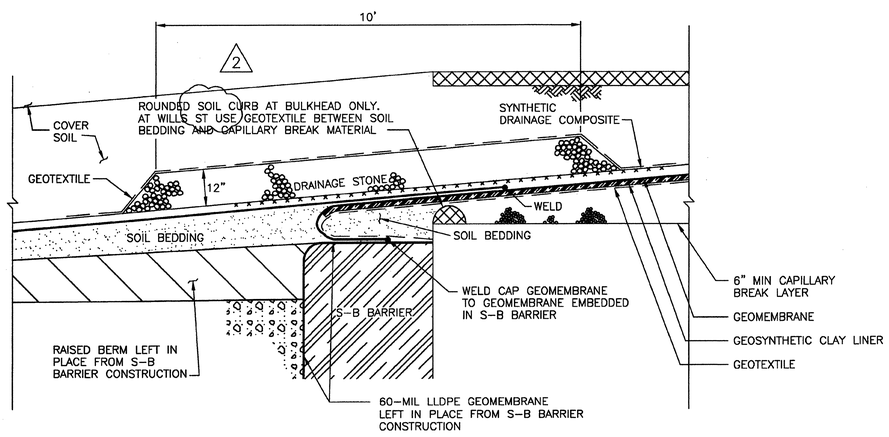

NOTE: HEIGHT OF ROUNDED ASPHALT CURB TO EQUAL THICKNESS OF CAPILLARY BREAK LAYER

GEOMEMBRANE CONNECTION TO S–B BARRIER (10) 4–23 4–27

NOT TO SCALE

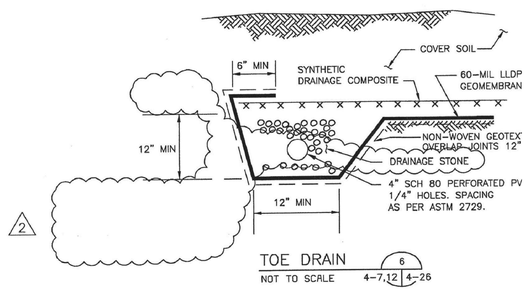

TOE DRAIN (6) 4–7,12 4–26

NOT TO SCALE

FOR INFORMATION ONLY

BHC ARCHITECTS
BEATTY•HARVEY•COCO ARCHITECTS, LLP
NYC | LONG ISLAND | BALTIMORE
1300 Thames St., Suite 10, Baltimore, Maryland 21231
p: (410) 752-2759

developer
Beatty Development Group
1300 Thames Street, Suite 10
Baltimore, MD 21231
P 410-332-1100

structural engineer
Morris Ritchie & Associates, INC
1220-C East Joppa Road, Suite 505 INC
Towson, MD 21286
P 410-821-1690

mep engineer
JDB Engineering, Inc.
225 International Circle, Suite 102
Hunt Valley, MD 21030
P 410-771-3433

geotech / foundation engineer
Mueser Rutledge Consulting Engineer
225 West 34th St
New York, NY 10122
P 917-339-9300

civil engineer
Morris Ritchie & Associates, INC
14280 Park Center Drive, Suite A
Laurel, MD 20707
P 410-821-1690

landscape architect
Mahan Rykiel Associates
800 Wyman Park Drive, Suite 100
Baltimore, MD 21211
P 410-235-6001

environmental engineer
ERM Group, Inc
200 Harry S Truman Parkway Suite 400
Annapolis, MD 21401
P 410-266-0006

interior designer
Brayton Hughes Design Studios
465 California Street, Suite 350
San Francisco, CA 94104
P 415-343-6108

food service
Cini Little International, Inc
20251 Century Blvd., Suite 375
Germantown, MD 20874
P 301-528-9700

lighting
Grenald Waldron Associates
260 Haverford Avenue, PO Box 525
Narberth, PA 19072
P 610-667-6330

landscape architect
Core Studio Design
1817 Bolton Street
Baltimore, MD 21217
P 410-878-7532

fire protection engineer
Jensen Hughes
3610 Commerce Drive, Suite B17
Baltimore, MD 21227
P 410-737-8677

DETAILED DEVELOPMENT PLAN
(APRIL 29, 2016)

key

NORTH

project
WILLS WHARF OFFICE/HOTEL

HARBOR POINT
BALTIMORE, MARYLAND

seal

issued	date	description

title
MULTI MEDIA CAP & SOIL CAP AS-BUILT CONDITION

drawn by:	E.C.
checked by:	A.M.D.
scale:	N.T.S.
project number:	MRCE - 12582
	scaled inch

sheet number

DDP-F1.12

Tuesday, Sep 20, 2016 – 02:34:20 PM
© Beatty Harvey Coco Architects, LLP
Eugina Cherkasskaya G:\DWGS\125\12582\DDP-F1.12.dwg

Last saved by: echerkasskaya on Tuesday, Sep 20, 2016 – 1:54:52 PM
4/29/2016 1:59:27 PM

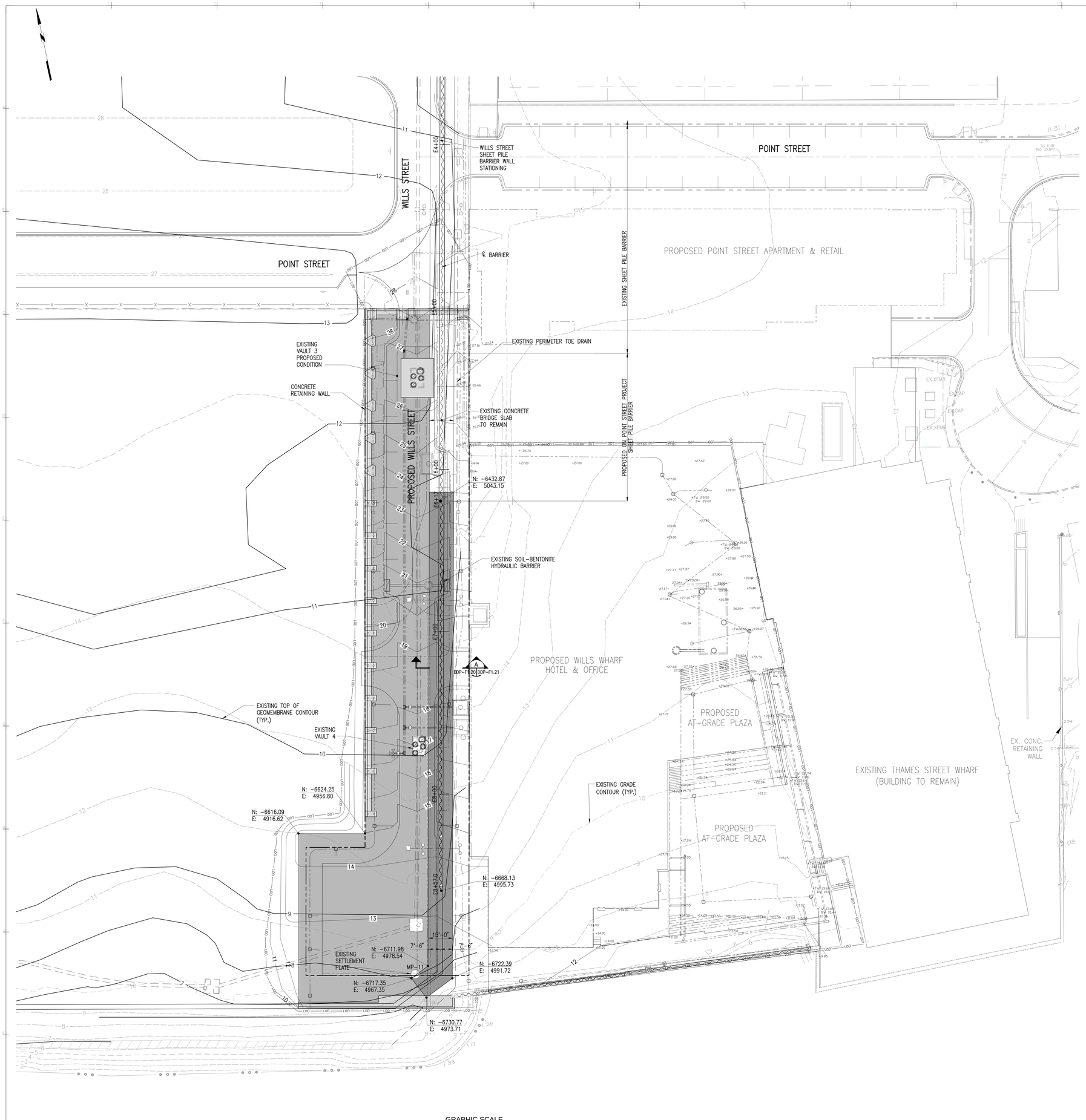

NOTES:

1. For General and Technical notes, see drawings DDP–F1.01, DDP–F1.02 and DDP–F1.03.
2. See note 1 under sheet pile notes on drawing DDP–F1.02.
3. For Typical sheet pile barrier see drawing DDP–F1.22.
4. Top of concrete bridge slab will vary depending on top of the soil–bentonite hydraulic barrier. See Section A on the drawing DDP–F1.21 and drawing DDP–F1.53 for detail.
5. Top of concrete protective slab elevation will vary depending on elevation of existing grade. Adjacent to retaining wall footings and utilities place protective slab on a slope similar to that shown on section A on drawing DDP–F1.21. See DDP–F1.53 for typical concrete protective slab detail.
6. For partial plan and section of concrete retaining wall see drawing DDP–F1.43 and DDP–F1.52.
7. For partial plan, section and detail of concrete cap see drawing DDP–F1.43, DDP–F1.50 and DDP–F1.51.
8. For partial plan of concrete pile supported platform see drawing DDP–F1.44.
4. For plan and section of proposed condition at vault 3 see drawing DDP–F1.53.
5. For plan and section of pile cap see drawings DDP–F1.51.

LEGEND:

- – Proposed concrete protective slab
- – Proposed concrete bridge slab
- – Proposed concrete retaining wall, concrete cap beam.

Table 1: Sheet Pile Elevations

Sheet Pile Stationing	Proposed Sheet Pile Top Elevation	Proposed Sheet Pile Tip Elevation
E6+17 to E7+00	+ 7*	–67
E7+00 to E7+60	+ 7*	–69
E7+60 to E8+00	+ 7*	–69
E8+00 to E8+50	+ 7*	–69
E8+50 to E8+57	+ 7*	–70

* – Sheet Pile Cutoff Elevation may vary. Top of Sheetpile to be 6 inches below geomembrane. Confirm Elevation in field.

GRAPHIC SCALE
20' 10' 0 20' 40'

BHC ARCHITECTS
BEATTY•HARVEY•COCO ARCHITECTS, LLP
NYC | LONG ISLAND | BALTIMORE
1300 Thames St., Suite 10, Baltimore, Maryland 21231
p: (410) 752-2759

developer
Beatty Development Group
1300 Thames Street, Suite 10
Baltimore, MD 21231
P 410-332-1100

structural engineer
Morris Ritchie & Associates, INC
1220-C East Jappa Road, Suite 505 INC
Towson, MD 21286
P 410-821-1690

mep engineer
JDB Engineering, Inc.
225 International Circle, Suite 102
Hunt Valley, MD 21030
P 410-771-3433

geotech / foundation engineer
Mueser Rutledge Consulting Engineer
225 West 34th St
New York, NY 10122
P 917-339-9300

civil engineer
Morris Ritchie & Associates, INC
14280 Park Center Drive, Suite A
Laurel, MD 20707
P 410-821-1690

landscape architect
Mahan Rykiel Associates
800 Wyman Park Drive, Suite 100
Baltimore, MD 21211
P 410-235-6001

environmental engineer
ERM Group, Inc
200 Harry S Truman Parkway Suite 400
Annapolis, MD 21401
P 410-266-0006

interior designer
Brayton Hughes Design Studios
465 California Street, Suite 350
San Francisco, CA 94104
P 415-343-6108

food service
Cini Little International, Inc
20251 Century Blvd., Suite 375
Germantown, MD 20874
P 301-528-9700

lighting
Grenald Waldron Associates
260 Haverford Avenue, PO Box 525
Narberth, PA 19072
P 610-667-6330

landscape architect
Core Studio Design
1817 Bolton Street
Baltimore, MD 21217
P 410-878-7532

fire protection engineer
Jensen Hughes
3610 Commerce Drive, Suite B17
Baltimore, MD 21227
P 410-737-8677

DETAILED DEVELOPMENT PLAN
(APRIL 29, 2016)

key

NORTH

project
WILLS WHARF OFFICE/HOTEL

HARBOR POINT
BALTIMORE, MARYLAND

seal

issued	date	description

title
SHEET PILE BARRIER WALL PLAN

drawn by:	E.C.
checked by:	G.S.
scale:	AS SHOWN
project number:	MRCE - 12582
sheet number	scaled inch

DDP-F1.20

Tuesday, Sep 20, 2016 – 02:34:44 PM
© Beatty Harvey Coco Architects, LLP
Eugina Cherkasskaya G:\DWGS\125\12582\DDP-F1.20.dwg

Last saved by: echerkasskaya on Wednesday, Apr 27, 2016 – 4:49:41 PM
4/26/2016 1:50:27 PM

WILLS STREET ALIGNMENT

1 TYPICAL EXISTING CONDITIONS

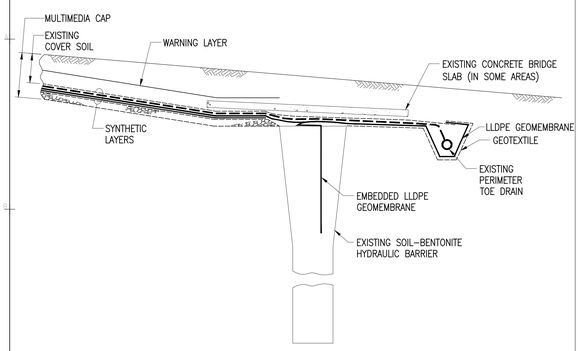

SECTION A EXISTING
DDP–F1.20 DDP–F1.21

1. Existing HMS conduits to be protected against damage (not shown).
2. Install geomembrane dam.

2 EXCAVATE TO EXPOSE SYNTHETIC LAYERS

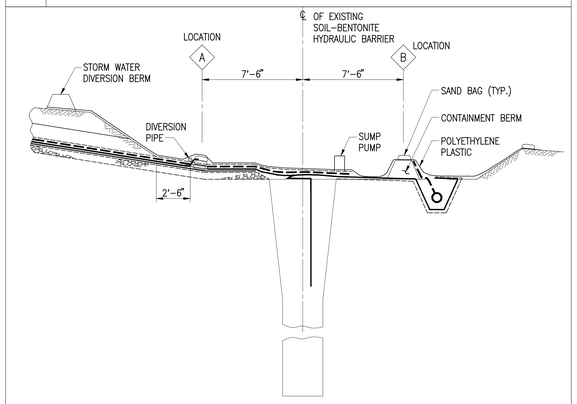

SECTION A EXCAVATE
DDP–F1.20 DDP–F1.21

1. Lay out barrier center line by survey.
2. Build storm water diversion berm to prevent sheet flow run–on.
3. Excavate to expose synthetic layers with 1.5H:1.0V slopes or flatter.
4. Cut and dispose cover Geotextile and Drainage Net from outboard of Soil–Bentonite Barrier to Location B.
5. Place containment berm at Location B.
6. Seal/protect face of Drainage Net outboard of Location B against contamination intake on containment berm.
7. *Shingle cut (see Detail 1) Cover Geotextile, Drainage Net, Geomembrane and GCL inboard of sheet pile at Location A.*
8. *Secure Geomembrane diversion with sand bags and storm water diversion pipe at Location A.*
9. *Use pumps and pipes to remove ponded storm water upslope of diversion berm as needed.*
10. *Cover exposed synthetic layers and containment berm with polyethylene plastic sheeting. Secure with sand bags. Manage storm water with bucket sump pumps.*

3 CUT SYNTHETIC LAYERS AND DRIVE SHEET PILES

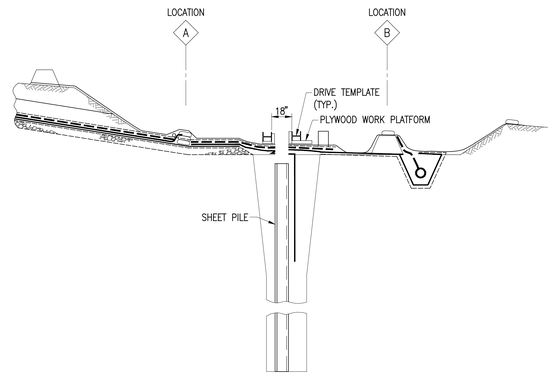

SECTION A DRIVE SHEET PILE
DDP–F1.20 DDP–F1.21

1. Lay out barrier centerline.
2. Provide stable work platform for labor and sheet pile operations. Use plywood or other materials.
3. *Cut and remove synthetic layers sufficient width for sheet pile installation.*
4. *Perform test pits at 50 ft intervals to locate barrier sidewalls for wall centerline approximation. (Use test pit close spacing to find SE corner of barrier.)*
5. Survey elevation of MMC synthetic layers and top of SB backfill at 50 ft spacing and where sheet pile barrier alignment crosses from former industrial land to the embankment fill.
6. Place and secure drive template and install interlocked sheet pile with interlock sealant.
7. *Cut sheet pile (a) 6" below top of MMC synthetic layers or (b) at Elev. +7, whichever is higher.*
8. *Prepare imported SB backfill and place to cover top of sheet pile. See details for width of SB backfill.*
9. *Cover active work area with polyethylene plastic at end of each work day.*
10. *If any sheet pile is pulled, remove SB backfill material from sheet pile (scrape and power wash) so that no more than 10 ft of unwashed sheet is exposed above work surface.*

4 RESTORE SYNTHETIC LAYERS

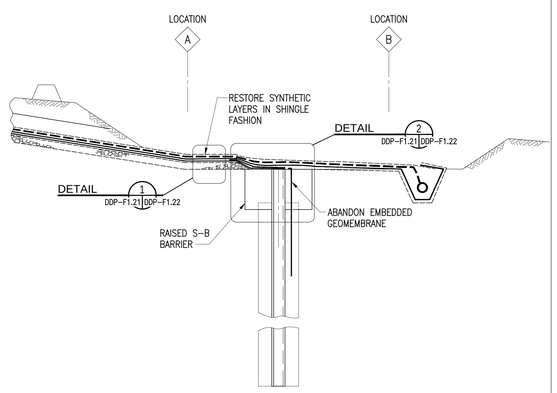

SECTION A RESTORE
DDP–F1.20 DDP–F1.21

1. *Remove and dispose polyethylene plastic.*
2. *Remove containment berm from Location B.*
3. *Abandon embedded Geomembrane (do not restore connection at top).*
4. *Replace synthetic layers from Location A to Location B.*
5. *Place SB Backfill plug at end of sheet pile barrier wall for closure.*
6. *Perform quality control and quality assurance testing of Geomembrane.*
7. Piles may only be driven after sheet pile barrier is installed within 30 ft.

5 MULTIMEDIA CAP WITH CONCRETE BRIDGE SLAB

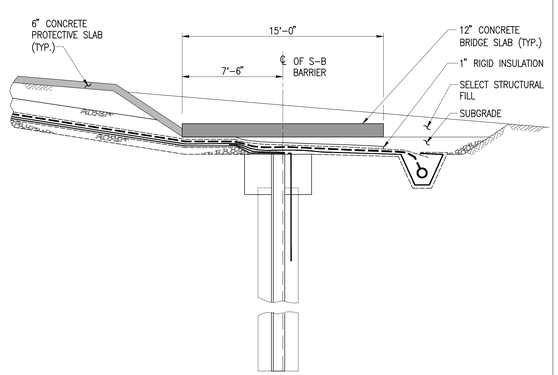

SECTION A
DDP–F1.20 DDP–F1.21

1. Lay out barrier center line by optical survey.
2. Place 1" Styrofoam on synthetic layers where total future select granular fill is less than 30".
3. Place clean select granular fill on Styrofoam to create a level subgrade.
4. Place Concrete Bridge Slab over barrier where barrier is below future street. All supports for slab reinforcement shall not penetrate the Styrofoam into the membrane. No form stakes, pins, etc., shall be driven over the geomembrane layer.
5. Place select granular fill to Warning Layer, place warning layer.
6. Place Select Granular Fill to final grade.

NOTES:

1. For Technical and General notes, see drawings DDP–F1.01, DDP–F1.02 and DDP–F1.03.
2. Steps in Italic require Level D–Modified PPE.
3. For typical concrete bridge slab and concrete protective slab detail see drawing DDP–F1.53.
4. For as–built conditions and details refer to drawing DDP–F1.12.

BHC ARCHITECTS
BEATTY•HARVEY•COCO ARCHITECTS, LLP
NYC | LONG ISLAND | BALTIMORE
1300 Thames St., Suite 10, Baltimore, Maryland 21231
p: (410) 752-2759

developer
Beatty Development Group
1300 Thames Street, Suite 10
Baltimore, MD 21231
P 410-332-1100

structural engineer
Morris Ritchie & Associates, INC
1220-C East Joppa Road, Suite 505 INC
Towson, MD 21286
P 410-821-1690

mep engineer
JDB Engineering, Inc.
225 International Circle, Suite 102
Hunt Valley, MD 21030
P 410-771-3433

geotech / foundation engineer
Mueser Rutledge Consulting Engineer
225 West 34th St
New York, NY 10122
P 917-339-9300

civil engineer
Morris Ritchie & Associates, INC
14280 Park Center Drive, Suite A
Laurel, MD 20707
P 410-821-1690

landscape architect
Mahan Rykiel Associates
800 Wyman Park Drive, Suite 100
Baltimore, MD 21211
P 410-235-6001

environmental engineer
ERM Group, Inc
200 Harry S Truman Parkway Suite 400
Annapolis, MD 21401
P 410-266-0006

interior designer
Brayton Hughes Design Studios
465 California Street, Suite 350
San Francisco, CA 94104
P 415-343-6108

food service
Cini Little International, Inc
20251 Century Blvd., Suite 375
Germantown, MD 20874
P 301-528-9700

lighting
Grenald Waldron Associates
260 Haverford Avenue, PO Box 525
Narberth, PA 19072
P 610-667-6330

landscape architect
Core Studio Design
1817 Bolton Street
Baltimore, MD 21217
P 410-878-7532

fire protection engineer
Jensen Hughes
3610 Commerce Drive, Suite B17
Baltimore, MD 21227
P 410-737-8677

DETAILED DEVELOPMENT PLAN
(SEPTEMBER 16, 2016)

key

project
WILLS WHARF OFFICE/HOTEL

HARBOR POINT
BALTIMORE, MARYLAND

seal

issued	date	description

title
SHEET PILE BARRIER WALL CONSTRUCTION SEQUENCE

drawn by:	E.C.
checked by:	G.S.
scale:	N.T.S.
project number:	MRCE - 12582

scaled inch

sheet number
DDP-F1.21

Tuesday, Sep 20, 2016 – 03:36:11 PM
© Beatty Harvey Coco Architects, LLP
Eugina Cherkasskaya G:\DWGS\125\12582\DDP-F1.21.dwg

Last saved by: echerkasskaya on Tuesday, Sep 20, 2016 – 2:30:19 PM
4/26/2016 1:59:27 PM

DETAIL 1: SHINGLE CUT AND REPAIR OF MULTIMEDIA CAP SYNTHETIC LAYERS

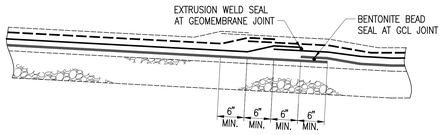

DETAIL 1
N.T.S.
DDP–F1.21 DDP–F1.22

Construction Sequence:

1. Expose MMC synthetic layers sufficient width to allow preparation, welding, and QC testing.
2. At cut locations for final repair, use backing board to protect underlying layers.
3. *Use knife, shears, or razor to cut synthetic layers; do not tear.*
4. *Cut bonded materials in a single layer.*
5. *Apply cushion and cover geotextiles consistent with MMC.*
6. *Place GCL and geomembrane joints in shingle fashion to protect against top–down moisture penetration.*
7. *Seal – weld Geomembrane.*
8. *Perform Quality Control and Quality Assurance testing of Geomembrane.*

DETAIL 2: REPAIR OF MMC SYNTHETIC LAYERS OVER SHEET PILE BARRIER

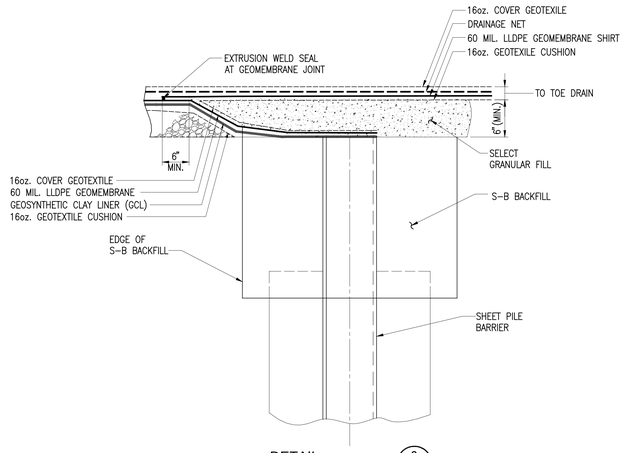

DETAIL 2
N.T.S.
DDP–F1.21 DDP–F1.22

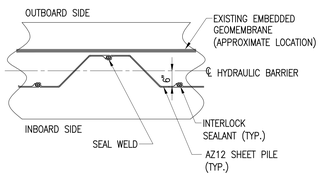

TYPICAL SHEET PILE BARRIER
NOT TO SCALE

NOTES:

1. For Technical and General notes, see drawings DDP–F1.01, DDP–F1.02 and DDP–F1.03.
2. Steps in Italic require Level D–Modified PPE.
3. For complete existing MMC see drawing DDP–F1.12.

BHC ARCHITECTS
BEATTY•HARVEY•COCO ARCHITECTS, LLP
NYC | LONG ISLAND | BALTIMORE
1300 Thames St., Suite 10, Baltimore, Maryland 21231
p: (410) 752-2759

developer
Beatty Development Group
1300 Thames Street, Suite 10
Baltimore, MD 21231
P 410-332-1100

structural engineer
Morris Ritchie & Associates, INC
1220-C East Jappa Road, Suite 505 INC
Towson, MD 21286
P 410-821-1690

mep engineer
JDB Engineering, Inc.
225 International Circle, Suite 102
Hunt Valley, MD 21030
P 410-771-3433

geotech / foundation engineer
Mueser Rutledge Consulting Engineer
225 West 34th St
New York, NY 10122
P 917-339-9300

civil engineer
Morris Ritchie & Associates, INC
14280 Park Center Drive, Suite A
Laurel, MD 20707
P 410-821-1690

landscape architect
Mahan Rykiel Associates
800 Wyman Park Drive, Suite 100
Baltimore, MD 21211
P 410-235-6001

environmental engineer
ERM Group, Inc
200 Harry S Truman Parkway Suite 400
Annapolis, MD 21401
P 410-266-0006

interior designer
Brayton Hughes Design Studios
465 California Street, Suite 350
San Francisco, CA 94104
P 415-343-6108

food service
Cini Little International, Inc
20251 Century Blvd., Suite 375
Germantown, MD 20874
P 301-528-9700

lighting
Grenald Waldron Associates
260 Haverford Avenue, PO Box 525
Narberth, PA 19072
P 610-667-6330

landscape architect
Core Studio Design
1817 Bolton Street
Baltimore, MD 21217
P 410-878-7532

fire protection engineer
Jensen Hughes
3610 Commerce Drive, Suite 817
Baltimore, MD 21227
P 410-737-8677

DETAILED
DEVELOPMENT PLAN
(SEPTEMBER 16, 2016)

key

NORTH

project
WILLS WHARF
OFFICE/HOTEL

HARBOR POINT
BALTIMORE, MARYLAND

seal

issued	date	description

title
SHEET PILE
WALL TYPICAL
DETAILS

drawn by:	E.C.
checked by:	G.S.
scale:	AS SHOWN
project number:	MRCE - 12582
	scaled inch

sheet number
DDP-F1.22

Tuesday, Sep 20, 2016 – 02:34:50 PM
© Beatty Harvey Coco Architects, LLP
Eugina Cherkasskaya G:\DWGS\125\12582\DDP-F1.22.dwg

Last saved by: echerkasskaya on Tuesday, Sep 20, 2016 – 2:30:44 PM
4/25/2014 1:39:27 PM

1 EXCAVATE TO EXPOSE SYNTHETIC LAYERS AND PROTECT MMC CAP FACE

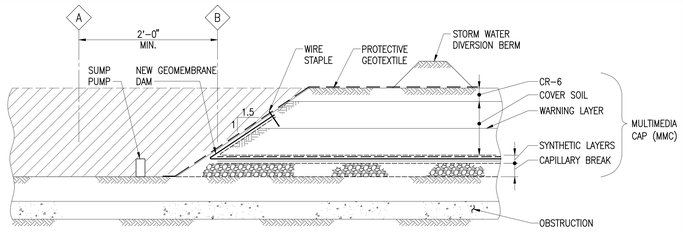

1. Place Protective Geotextile at top of future excavation.
2. Place storm water diversion berm at up-slope perimeter.
3. Excavate CR-6 and Cover Soil at 1.5H:1V slope or flatter. Place toe of slope at synthetic layers at Location B. Control dust throughout MMC removal.
4. Edge cut and dispose Cover Geotextile 2.5 feet inboard of Location B. Fold onto up-slope face.
5. Edge cut and dispose Drainage Net inboard of Location B.
6. *Extrusion weld temporary Geomembrane Dam inboard of Location B to isolate excavation from Drainage Net. Extend Geomembrane Dam 30" minimum on up-slope face along 3 up hill side perimeter faces (See Detail 2). On down hill side of excavation cut Geomembrane dam 9" on up-slope face.*
7. *Edge cut and dispose Geomembrane from 2.5 feet inboard at Location B. Fold onto up-slope face and secure with wire staple (6"maximum length).*
8. *Edge cut and dispose GCL and Geotextile Cushion inboard of Location B to expose and remove Capillary Break Gravel.*
9. *Cut and dispose Base Geotextile at toe of slope.*
10. *Place Protective Geotextile to cover slopes.*
11. *Use sump pumps in excavation to remove storm water.*
12. *Proceed to remove MMC across pile cap footprint. Machine excavation below warning layer is permitted inboard of Location B. Secure all edges outboard of Location A. Cut and secure up-slope face first.*

2 DEMOLISH OBSTRUCTIONS

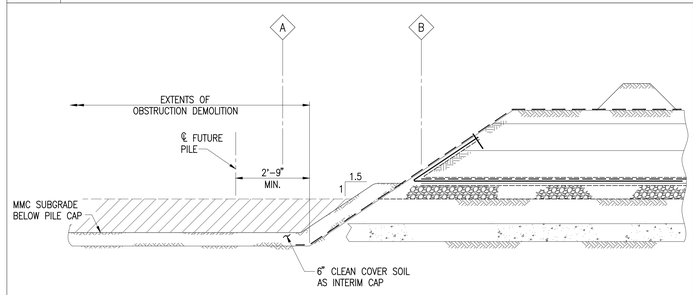

1. *Control dust throughout obstruction removal.*
2. *Expose and demolish obstruction at pile locations.*
3. *Remove debris (See Area 1, Phase 1 Material Handling and Management Plan, December 3, 2013 by ERM).*
4. *Place aggregate soil in demolition void (Capillary Break Gravel or other).*
5. *Place 6" clean Cover Soil as Interim Cap to obtain MMC subgrade and cover exposed soil.*

3 CONSTRUCT PILES

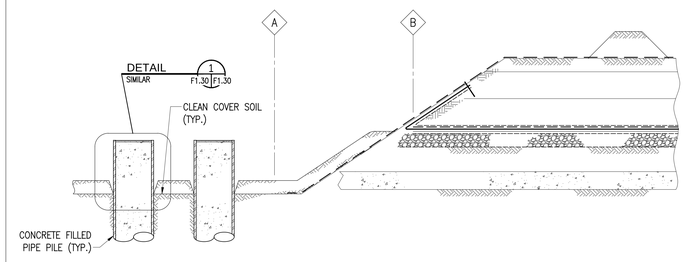

1. Survey and mark pile locations.
2. Drive pile.
3. Replace clean Cover Soil around pile shaft after driving is complete.
4. Cut off at designated elevation.
5. Place concrete fill. Clean pile surface free of concrete or mortar spillage at and above boot elevation.
6. Place high-strength epoxy grout after concrete fill has cured seven days (Detail 1).

4A REPLACE MMC SYNTHETIC LAYERS – DIAGRAM

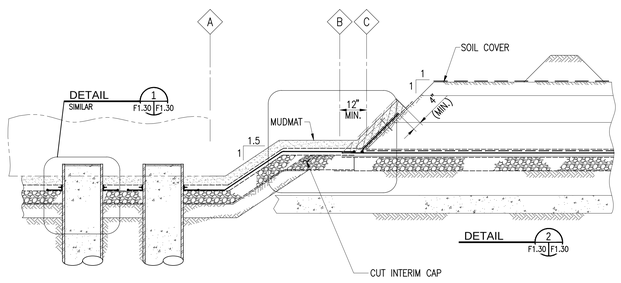

4B REPLACE MMC SYNTHETIC LAYERS – SEQUENCE

1. *Remove and dispose interim cap above existing Geotextile cushion inboard of Location B.*
2. *Cut and dispose Protective Geotextile from top of slope to Location B.*
3. *Remove Cover Soil. Cut back toe of slope at 1V:1H to expose 12" of existing membrane. Place toe of slope at synthetic layers at Location C. Control dust throughout MMC removal.*
4. *Fold Cover Geotextile onto up-slope face.*
5. *Edge cut and dispose Drainage Net inboard of Location C.*
6. *Expose Base Geotextile inboard of Location B.*
7. *Place New Base Geotextile across pile cap. Cut Base Geotextile within 1/2" of pile wall; use pre-made panel with overlap joints. Overlap Base Geotextile with existing at Location B.*
8. *Place and compact imported Capillary Break Gravel under pile cap footprint inboard of Location B. Use vibrating plate compactor to flatten gravel surface.*
9. *Place new Geotextile Cushion across pile cap. Overlap Geotextile Cushion with existing at Location B. Cut Geotextile Cushion within 1/2" of pile wall; use pre-made panel with overlap joints.*
10. *Extrusion weld permanent Geomembrane Dam inboard of Location C to isolate pile cap from Drainage Net. Extend Geomembrane Dam 30" minimum on up-slope face along 3 up hill side perimeter faces (See Detail 2). On down hill side of excavation cut Geomembrane dam 9" on up-slope face.*
11. *Place new Geomembrane. Overlap Geomembrane with existing at Location B. Over-cut at piles.*
12. Place pre-made boots over piles. Place gasket and clamp boot to pile wall. Extrusion weld boot to Geomembrane.
13. Extrusion weld Geomembrane to existing MMC Geomembrane using shingle repair in Detail 2. Manage corners and grade changes with additional Geomembrane and extrusion welding.
14. Perform Quality Control and Quality Assurance testing of Geomembrane and boots.
15. Place new Cover Geotextile across pile cap to cover Geomembrane Dam. Protect boot with Cover Geotextile.
16. Place mudmat to protect MMC synthetic layers across pile cap footprint to 4" above top of geomembrane dam (min.).

5 PLACE PILE CAP AND GRADE BEAMS

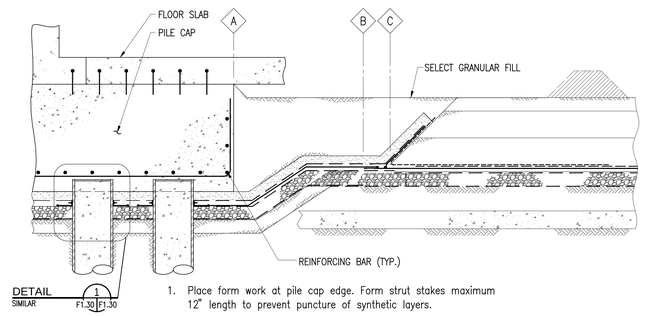

1. Place form work at pile cap edge. Form strut stakes maximum 12" length to prevent puncture of synthetic layers.
2. Place reinforcing steel.
3. Place concrete.
4. Remove form work.
5. Place select Granular fill to restore existing grades. Grade may be raised only where indicated on Drawing C8.00.
6. Remove storm water diversion berm.
7. Place concrete floor slab and column.

PILE CONNECTION AND RESTORED MMC BELOW PILE CAP

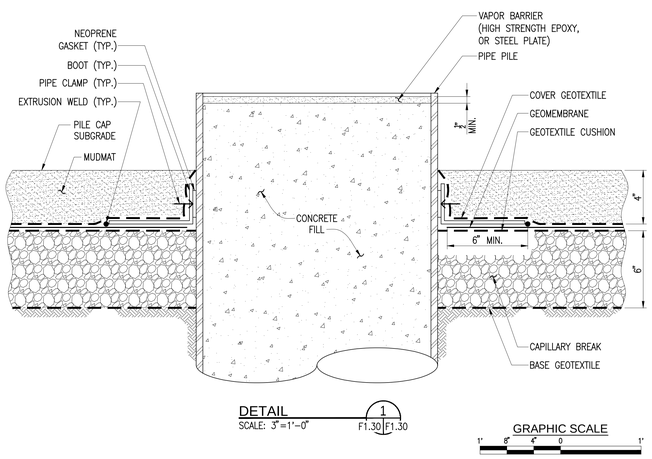

MMC REPAIR AT LOCATION C

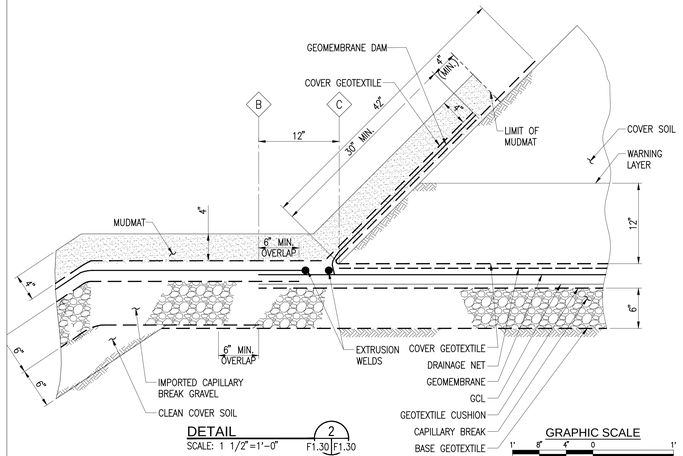

NOTES:

1. For General and Technical notes, see drawings DDP-F1.01, DDP-F1.02 and DDP-F1.03.
2. Steps in Italics require Level D-Modified PPE.
3. For Potential Obstruction, see drawing DDP-F1.13.

BHC ARCHITECTS
BEATTY•HARVEY•COCO ARCHITECTS, LLP
NYC | LONG ISLAND | BALTIMORE
1300 Thames St., Suite 10, Baltimore, Maryland 21231
p: (410) 752-2759

developer
Beatty Development Group
1300 Thames Street, Suite 10
Baltimore, MD 21231
P 410-332-1100

structural engineer
Morris Ritchie & Associates, INC
1220-C East Jappa Road, Suite 505 INC
Towson, MD 21286
P 410-821-1690

mep engineer
JDB Engineering, Inc.
225 International Circle, Suite 102
Hunt Valley, MD 21030
P 410-771-3433

geotech / foundation engineer
Mueser Rutledge Consulting Engineer
225 West 34th St
New York, NY 10122
P 917-339-9300

civil engineer
Morris Ritchie & Associates, INC
14280 Park Center Drive, Suite A
Laurel, MD 20707
P 410-821-1690

landscape architect
Mahan Rykiel Associates
800 Wyman Park Drive, Suite 100
Baltimore, MD 21211
P 410-235-6001

environmental engineer
ERM Group, Inc
200 Harry S Truman Parkway Suite 400
Annapolis, MD 21401
P 410-266-0006

interior designer
Brayton Hughes Design Studios
465 California Street, Suite 350
San Francisco, CA 94104
P 415-343-6108

food service
Cini Little International, Inc
20251 Century Blvd., Suite 375
Germantown, MD 20874
P 301-528-9700

lighting
Grenald Waldron Associates
260 Haverford Avenue, PO Box 525
Narberth, PA 19072
P 410-667-6330

landscape architect
Core Studio Design
1817 Bolton Street
Baltimore, MD 21217
P 410-878-7532

fire protection engineer
Jensen Hughes
3610 Commerce Drive, Suite B17
Baltimore, MD 21227
P 410-737-8677

DETAILED DEVELOPMENT PLAN
(SEPTEMBER 16, 2016)

key

NORTH

project
WILLS WHARF OFFICE/HOTEL

HARBOR POINT
BALTIMORE, MARYLAND

seal

issued	date	description

title
PILE CAP CONSTRUCTION SEQUENCE

drawn by:	E.C.
checked by:	G.S.
scale:	AS SHOWN
project number:	MRCE - 12582

scaled inch

sheet number
DDP-F1.30

Tuesday, Sep 20, 2016 – 02:34:54 PM
© Beatty Harvey Coco Architects, LLP
Eugina Cherkasskaya G:\DWGS\125\12582\DDP-F1.30.dwg

Last saved by: echerkasskaya on Tuesday, Sep 20, 2016 – 2:01:44 PM
4/29/2016 1:39:27 PM

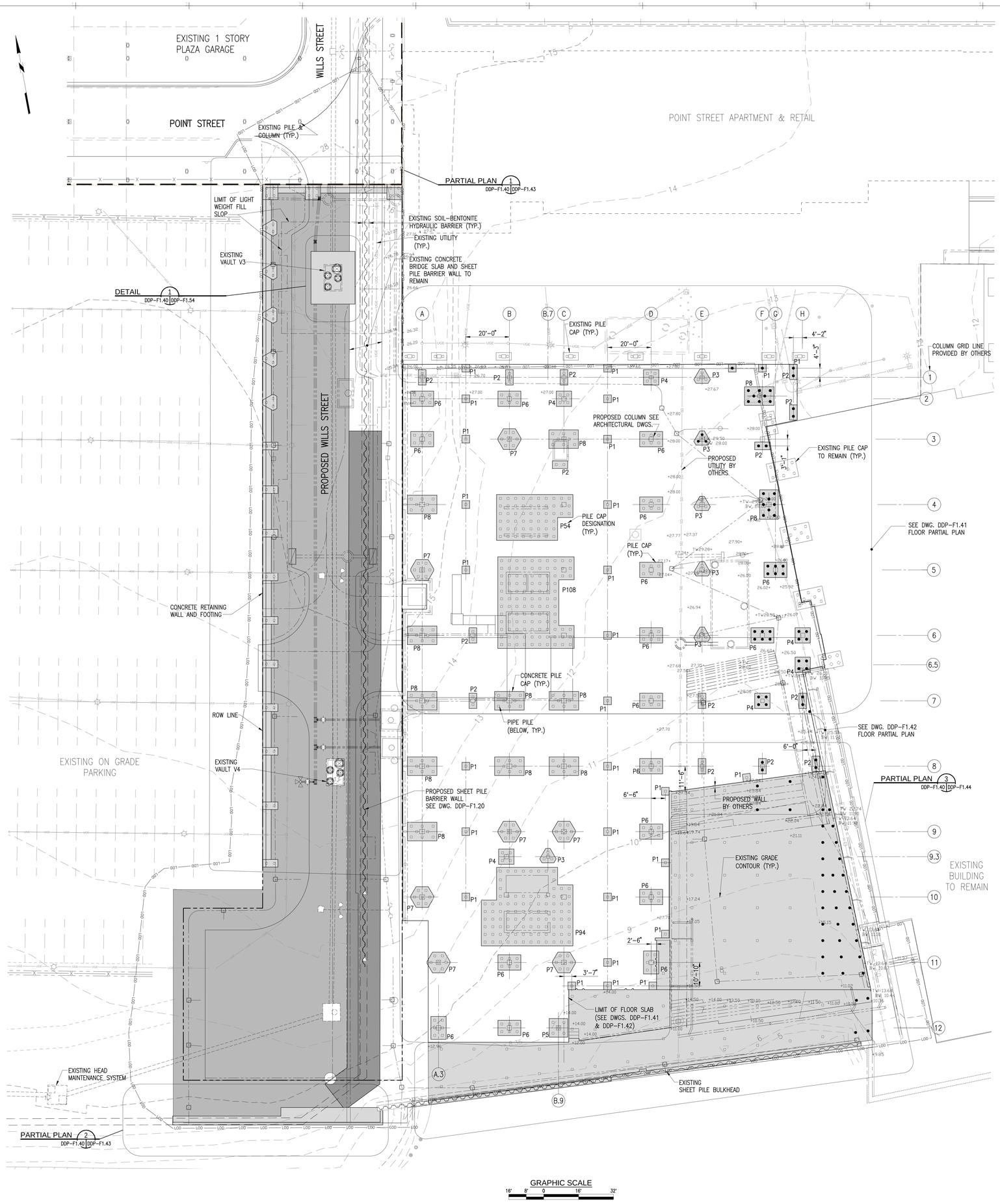

NOTES:

1. For General and Technical notes, see drawings DDP–F1.01, DDP–F1.02 and DDP–F1.03.
2. For Construction Sequence see drawing DDP–F1.21.
3. For Typical sheet pile barrier see drawing DDP–F1.22.
4. Top of concrete bridge slab will vary depending on top of the soil–bentonite hydraulic barrier. See Section A on the drawing DDP–F1.21 and drawing DDP–F1.53 for detail.
5. Top of concrete protective slab elevation will vary depending on elevation of existing grade. Adjacent to retaining wall footings and utilities place protective slab on a slope similar to that shown on section A on drawing DDP–F1.21. See DDP–F1.53 for typical concrete protective slab detail.
6. For partial plan and section of concrete retaining wall see drawing DDP–F1.43 and DDP–F1.52.
7. For partial plan, section and detail of concrete cap see drawings DDP–F1.43, DDP–F1.50 and DDP–F1.51.
8. For partial plan of concrete pile supported platform see drawing DDP–F1.44.
4. For plan and section of proposed condition at vault 3 see drawing DDP–F1.53.
5. For plan and section of pile cap see drawings DDP–F1.51.
6. All piles pile caps within 30 feet at TSW Existing Building shall be drilled.

LEGEND:

– Proposed Concrete protective slab

– Proposed Concrete bridge slab

– Proposed concrete retaining wall, concrete cap beam

• – Drilled piles

BHC ARCHITECTS
BEATTY•HARVEY•COCO ARCHITECTS, LLP
NYC | LONG ISLAND | BALTIMORE
1300 Thames St., Suite 10, Baltimore, Maryland 21231
p: (410) 752-2759

developer
Beatty Development Group
1300 Thames Street, Suite 10
Baltimore, MD 21231
P 410-332-1100

structural engineer
Morris Ritchie & Associates, INC
1220-C East Jappa Road, Suite 505 INC
Towson, MD 21286
P 410-821-1690

mep engineer
JDB Engineering, Inc.
225 International Circle, Suite 102
Hunt Valley, MD 21030
P 410-771-3433

geotech / foundation engineer
Mueser Rutledge Consulting Engineer
225 West 34th St
New York, NY 10122
P 917-339-9300

civil engineer
Morris Ritchie & Associates, INC
14280 Park Center Drive, Suite A
Laurel, MD 20707
P 410-821-1690

landscape architect
Mahan Rykiel Associates
800 Wyman Park Drive, Suite 100
Baltimore, MD 21211
P 410-235-6001

environmental engineer
ERM Group, Inc
200 Harry S Truman Parkway Suite 400
Annapolis, MD 21401
P 410-266-0006

interior designer
Brayton Hughes Design Studios
465 California Street, Suite 350
San Francisco, CA 94104
P 415-343-6108

food service
Cini Little International, Inc
20251 Century Blvd., Suite 375
Germantown, MD 20874
P 301-528-9700

lighting
Grenald Waldron Associates
260 Haverford Avenue, PO Box 525
Narberth, PA 19072
P 610-667-6330

landscape architect
Core Studio Design
1817 Bolton Street
Baltimore, MD 21217
P 410-878-7532

fire protection engineer
Jensen Hughes
3610 Commerce Drive, Suite 817
Baltimore, MD 21227
P 410-737-8677

DETAILED DEVELOPMENT PLAN
(APRIL 29, 2016)

key

project
WILLS WHARF OFFICE/HOTEL

HARBOR POINT
BALTIMORE, MARYLAND

seal

issued	date	description

title
FOUNDATION PLAN

drawn by:	E.C.
checked by:	F.L.
scale:	AS SHOWN
project number:	MRCE - 12582
	scaled inch

sheet number
DDP-F1.40

Tuesday, Sep 20, 2016 – 02:35:26 PM
© Beatty Harvey Coco Architects, LLP
Eugina Cherkasskaya G:\DWGS\125\12582\DDP-F1.40.dwg

Last saved by: echerkasskaya on Tuesday, Sep 20, 2016 – 2:03:28 PM
4/29/2016 1:59:27 PM

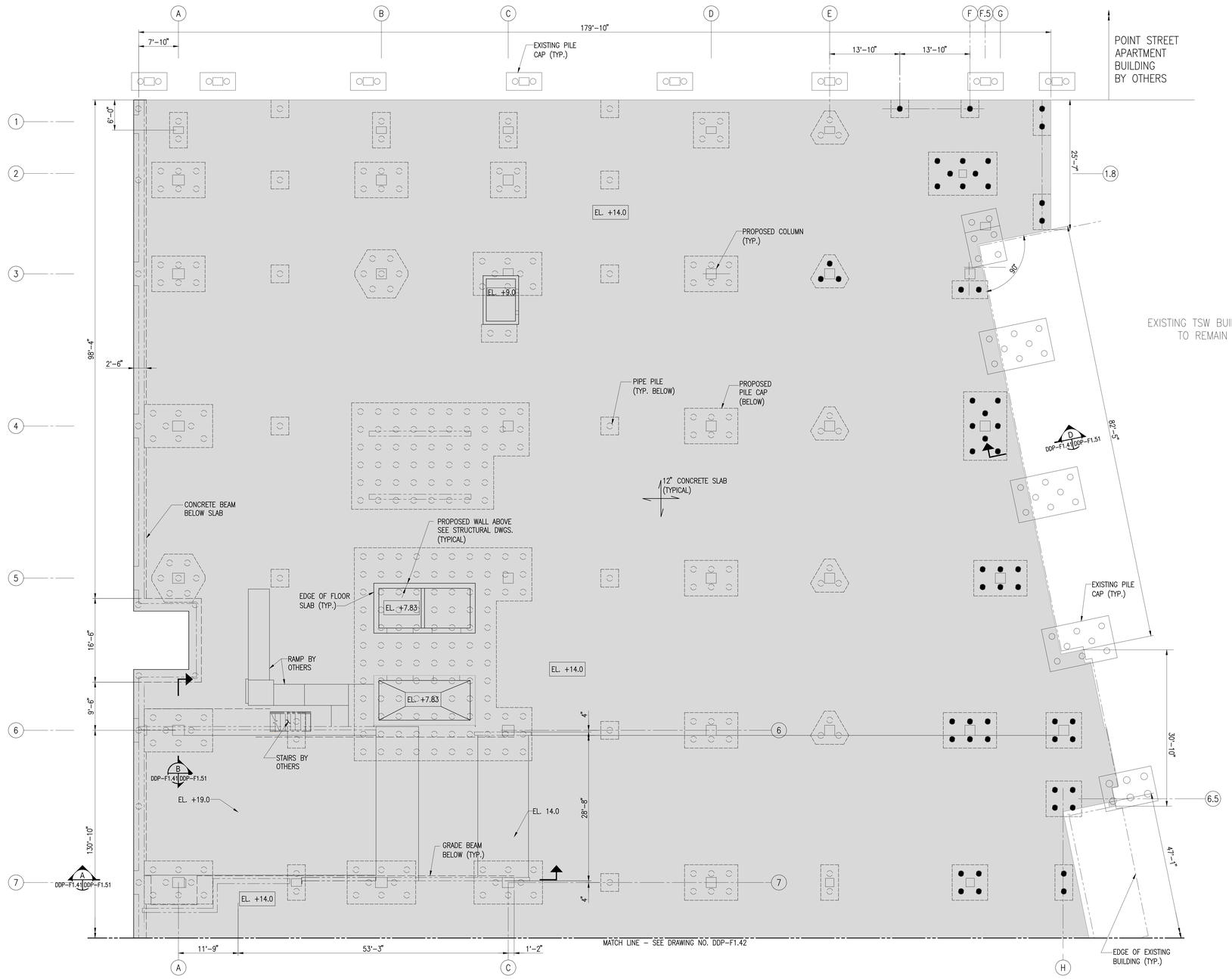

FLOOR PARTIAL PLAN

SCALE: 1/8" = 1'–0"

GRAPHIC SCALE

8' 4' 0 8' 16'

LEGEND:

- EL. +7.83 – TOP OF SLAB ELEVATION
- – CONCRETE SLAB
- ● – DRILLED PILES

BHC ARCHITECTS
BEATTY•HARVEY•COCO ARCHITECTS, LLP
NYC | LONG ISLAND | BALTIMORE
1300 Thames St., Suite 10, Baltimore, Maryland 21231
p: (410) 752-2759

developer
Beatty Development Group
1300 Thames Street, Suite 10
Baltimore, MD 21231
P 410-332-1100

structural engineer
Morris Ritchie & Associates, INC
1220-C East Jappa Road, Suite 505 INC
Towson, MD 21286
P 410-821-1690

mep engineer
JDB Engineering, Inc.
225 International Circle, Suite 102
Hunt Valley, MD 21030
P 410-771-3433

geotech / foundation engineer
Mueser Rutledge Consulting Engineer
225 West 34th St
New York, NY 10122
P 917-339-9300

civil engineer
Morris Ritchie & Associates, INC
14280 Park Center Drive, Suite A
Laurel, MD 20707
P 410-821-1690

landscape architect
Mahan Rykiel Associates
800 Wyman Park Drive, Suite 100
Baltimore, MD 21211
P 410-235-6001

environmental engineer
ERM Group, Inc
200 Harry S Truman Parkway Suite 400
Annapolis, MD 21401
P 410-266-0006

interior designer
Brayton Hughes Design Studios
465 California Street, Suite 350
San Francisco, CA 94104
P 415-343-6108

food service
Cini Little International, Inc
20251 Century Blvd., Suite 375
Germantown, MD 20874
P 301-528-9700

lighting
Grenald Waldron Associates
260 Haverford Avenue, PO Box 525
Narberth, PA 19072
P 610-667-6330

landscape architect
Core Studio Design
1817 Bolton Street
Baltimore, MD 21217
P 410-878-7532

fire protection engineer
Jensen Hughes
3610 Commerce Drive, Suite 817
Baltimore, MD 21227
P 410-737-8677

DETAILED DEVELOPMENT PLAN
(APRIL 29, 2016)

key

NORTH

project
WILLS WHARF OFFICE/HOTEL

HARBOR POINT
BALTIMORE, MARYLAND

seal

issued	date	description

title
FLOOR PARTIAL PLAN

drawn by:	E.C.
checked by:	F.L.
scale:	AS SHOWN
project number:	MRCE - 12582
	scaled inch

sheet number
DDP-F1.41

Tuesday, Sep 20, 2016 – 02:35:37 PM
© Beatty Harvey Coco Architects, LLP
Eugina Cherkasskaya G:\DWGS\125\12582\DDP-F1.41.dwg

Last saved by: echerkasskaya on Tuesday, Sep 20, 2016 – 2:05:00 PM
4/29/2016 1:59:27 PM

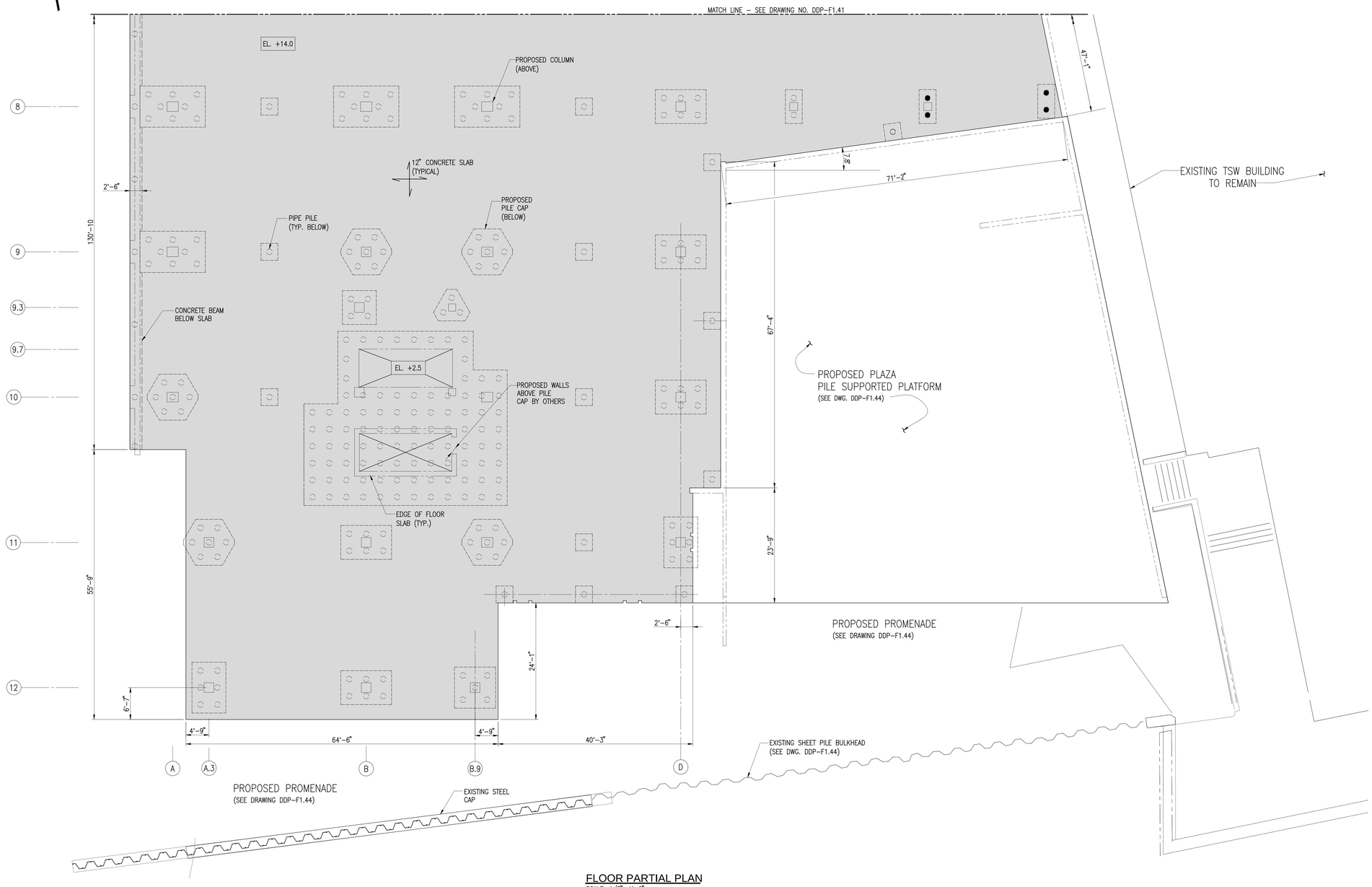

FLOOR PARTIAL PLAN

SCALE: 1/8"=1'–0"

GRAPHIC SCALE

8' 4' 0 8' 16'

LEGEND:

EL. +2.5 – TOP OF SLAB ELEVATION

– CONCRETE SLAB

● – DRILLED PILES

Tuesday, Sep 20, 2016 – 02:35:48 PM
© Beatty Harvey Coco Architects, LLP

BHC ARCHITECTS
BEATTY•HARVEY•COCO ARCHITECTS, LLP
NYC | LONG ISLAND | BALTIMORE
1300 Thames St., Suite 10, Baltimore, Maryland 21231
p: (410) 752-2759

developer
Beatty Development Group
1300 Thames Street, Suite 10
Baltimore, MD 21231
P 410-332-1100

structural engineer
Morris Ritchie & Associates, INC
1220-C East Jappa Road, Suite 505 INC
Towson, MD 21286
P 410-821-1690

mep engineer
JDB Engineering, Inc.
225 International Circle, Suite 102
Hunt Valley, MD 21030
P 410-771-3433

geotech / foundation engineer
Mueser Rutledge Consulting Engineer
225 West 34th St
New York, NY 10122
P 917-339-9300

civil engineer
Morris Ritchie & Associates, INC
14280 Park Center Drive, Suite A
Laurel, MD 20707
P 410-821-1690

landscape architect
Mahan Rykiel Associates
800 Wyman Park Drive, Suite 100
Baltimore, MD 21211
P 410-235-6001

environmental engineer
ERM Group, Inc
200 Harry S Truman Parkway Suite 400
Annapolis, MD 21401
P 410-266-0006

interior designer
Brayton Hughes Design Studios
465 California Street, Suite 350
San Francisco, CA 94104
P 415-343-6108

food service
Cini Little International, Inc
20251 Century Blvd., Suite 375
Germantown, MD 20874
P 301-528-9700

lighting
Grenald Waldron Associates
260 Haverford Avenue, PO Box 525
Narberth, PA 19072
P 610-667-6330

landscape architect
Core Studio Design
1817 Bolton Street
Baltimore, MD 21217
P 410-878-7532

fire protection engineer
Jensen Hughes
3610 Commerce Drive, Suite B17
Baltimore, MD 21227
P 410-737-8677

DETAILED DEVELOPMENT PLAN
(APRIL 29, 2016)

key

NORTH

project
WILLS WHARF
OFFICE/HOTEL

HARBOR POINT
BALTIMORE, MARYLAND

seal

issued	date	description

title
FLOOR PARTIAL PLAN

drawn by:	E.C.
checked by:	F.L.
scale:	AS SHOWN
project number:	MRCE - 12582
sheet number	scaled inch

DDP-F1.42

Eugina Cherkasskaya G:\DWGS\125\12582\DDP-F1.42.dwg

Last saved by: echerkasskaya on Tuesday, Sep 20, 2016 – 2:06:47 PM
4/29/2016 1:50:27 PM

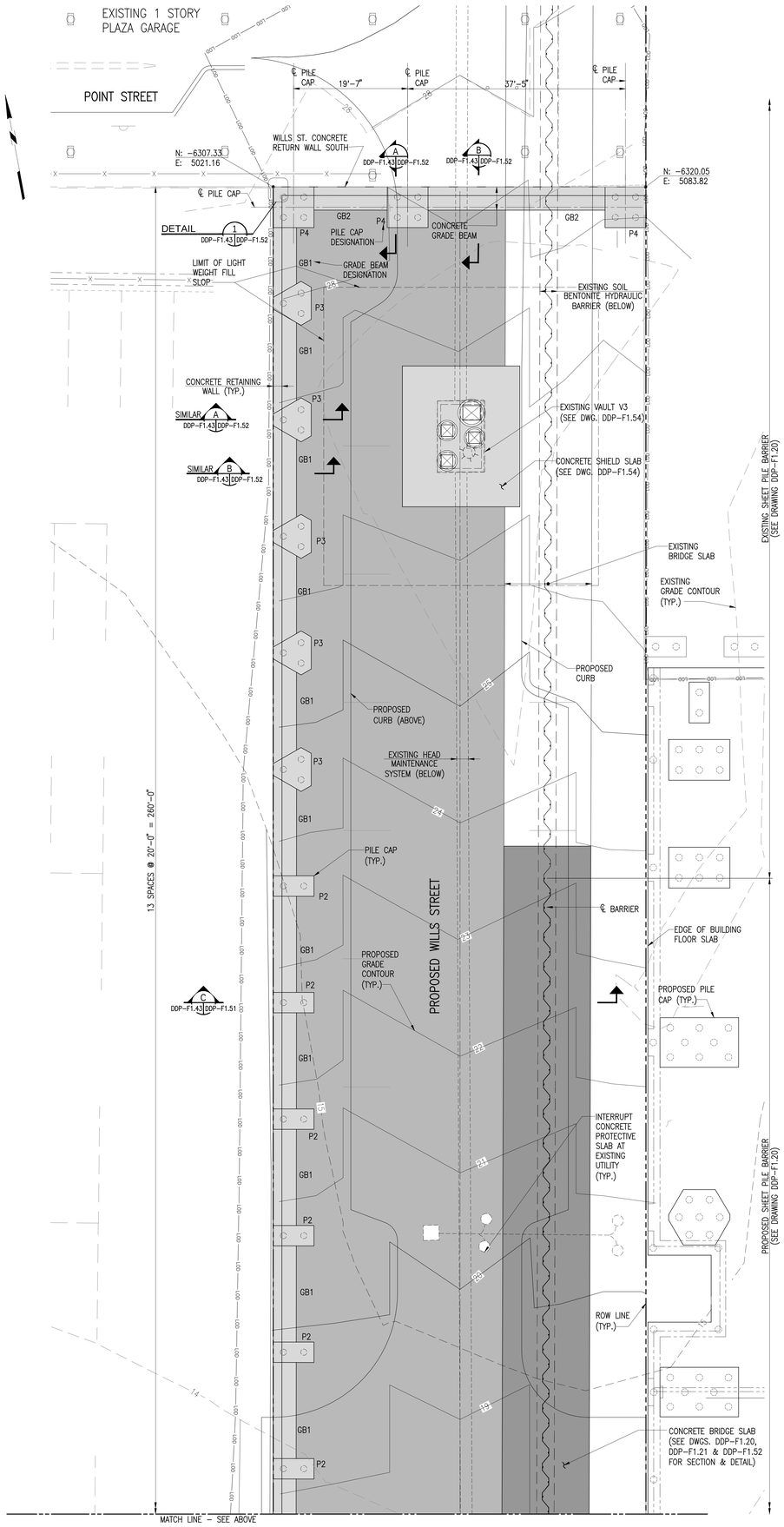

PARTIAL PLAN 1
SCALE: 1/8"=1'-0" DDP-F1.40 DDP-F1.43

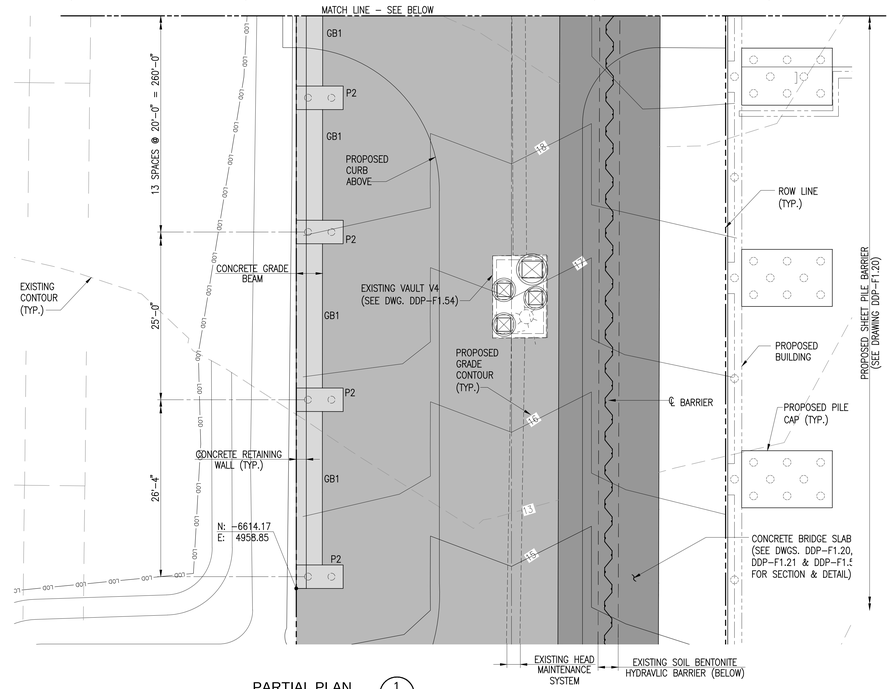

PARTIAL PLAN 1
SCALE: 1/8"=1'-0" DDP-F1.40 DDP-F1.43

NOTES:

1. For General and Technical Notes, see drawings DDP–F1.01, DDP–F1.02 and DDP–F1.03.
2. Top of concrete protective slab elevation will vary based on existing grade elevation. Place concrete protective slab on existing grade. Adjacent to retaining wall footings place protective slab on a slope similar to that shown on section C on drawing DDP–F1.51. See drawing DDP–F1.52 for typical protective slab detail.
3. Pile cap construction sequence for all pile caps on Area 1 on the West side of Wills Street see drawing DDP–F1.30.

LEGEND AND ABBREVIATION:

- Retaining walls, grade beam, concrete cap beam, shield slab, and foundation
- Concrete protective slab
- Concrete bridge slab

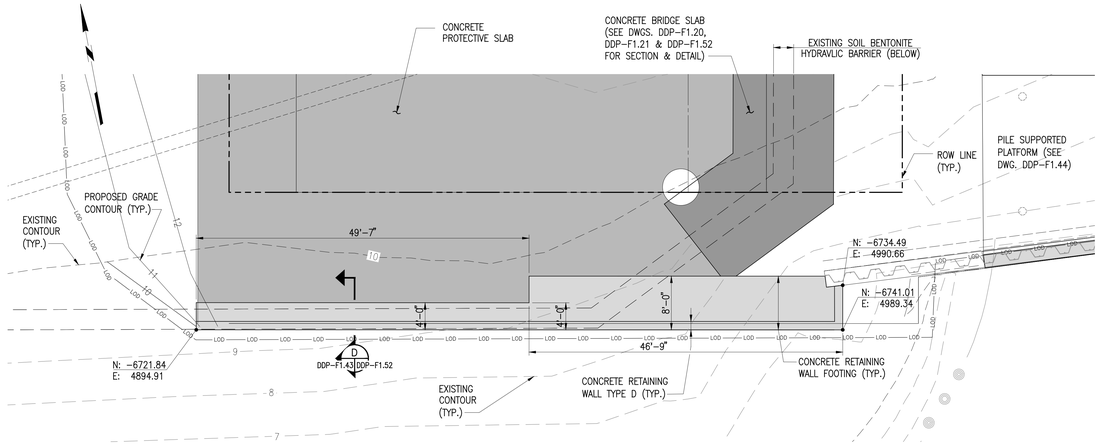

PARTIAL PLAN 2
SCALE: 1/8"=1'-0" DDP-F1.40 DDP-F1.43

GRAPHIC SCALE
8' 4' 0 8' 16'

BHC ARCHITECTS
BEATTY•HARVEY•COCO ARCHITECTS, LLP
NYC | LONG ISLAND | BALTIMORE
1300 Thames St., Suite 10, Baltimore, Maryland 21231
p: (410) 752-2759

developer
Beatty Development Group
1300 Thames Street, Suite 10
Baltimore, MD 21231
P 410-332-1100

structural engineer
Morris Ritchie & Associates, INC
1220-C East Jappa Road, Suite 505 INC
Towson, MD 21286
P 410-821-1690

mep engineer
JDB Engineering, Inc.
225 International Circle, Suite 102
Hunt Valley, MD 21030
P 410-771-3433

geotech / foundation engineer
Mueser Rutledge Consulting Engineer
225 West 34th St
New York, NY 10122
P 917-339-9300

civil engineer
Morris Ritchie & Associates, INC
14280 Park Center Drive, Suite A
Laurel, MD 20707
P 410-821-1690

landscape architect
Mahan Rykiel Associates
800 Wyman Park Drive, Suite 100
Baltimore, MD 21211
P 410-235-6001

environmental engineer
ERM Group, Inc
200 Harry S Truman Parkway Suite 400
Annapolis, MD 21401
P 410-266-0006

interior designer
Brayton Hughes Design Studios
465 California Street, Suite 350
San Francisco, CA 94104
P 415-343-6108

food service
Cini Little International, Inc
20251 Century Blvd., Suite 375
Germantown, MD 20874
P 301-528-9700

lighting
Grenald Waldron Associates
260 Haverford Avenue, PO Box 525
Narberth, PA 19072
P 610-667-6330

landscape architect
Core Studio Design
1817 Bolton Street
Baltimore, MD 21217
P 410-878-7532

fire protection engineer
Jensen Hughes
3610 Commerce Drive, Suite B17
Baltimore, MD 21227
P 410-737-8677

DETAILED DEVELOPMENT PLAN
(APRIL 29, 2016)

key

project
WILLS WHARF OFFICE/HOTEL

HARBOR POINT
BALTIMORE, MARYLAND

seal

issued	date	description

title
FOUNDATION PARTIAL PLAN

drawn by:	E.C.
checked by:	S.Y.
scale:	AS SHOWN
project number:	MRCE - 12582
	scaled inch

sheet number
DDP-F1.43

Tuesday, Sep 20, 2016 – 02:36:21 PM
© Beatty Harvey Coco Architects, LLP

Last saved by: echerkasskaya on Tuesday, Sep 20, 2016 – 2:07:50 PM
4/29/2016 1:59:27 PM

NOTES:

1. For General and Technical Notes, see drawings DDP–F1.01, DDP–F1.02 and DDP–F1.03.

LEGEND AND ABBREVIATION:

- Concrete Platform
- EL. +10.5 – Top of concrete slab elevation
- Drilled piles

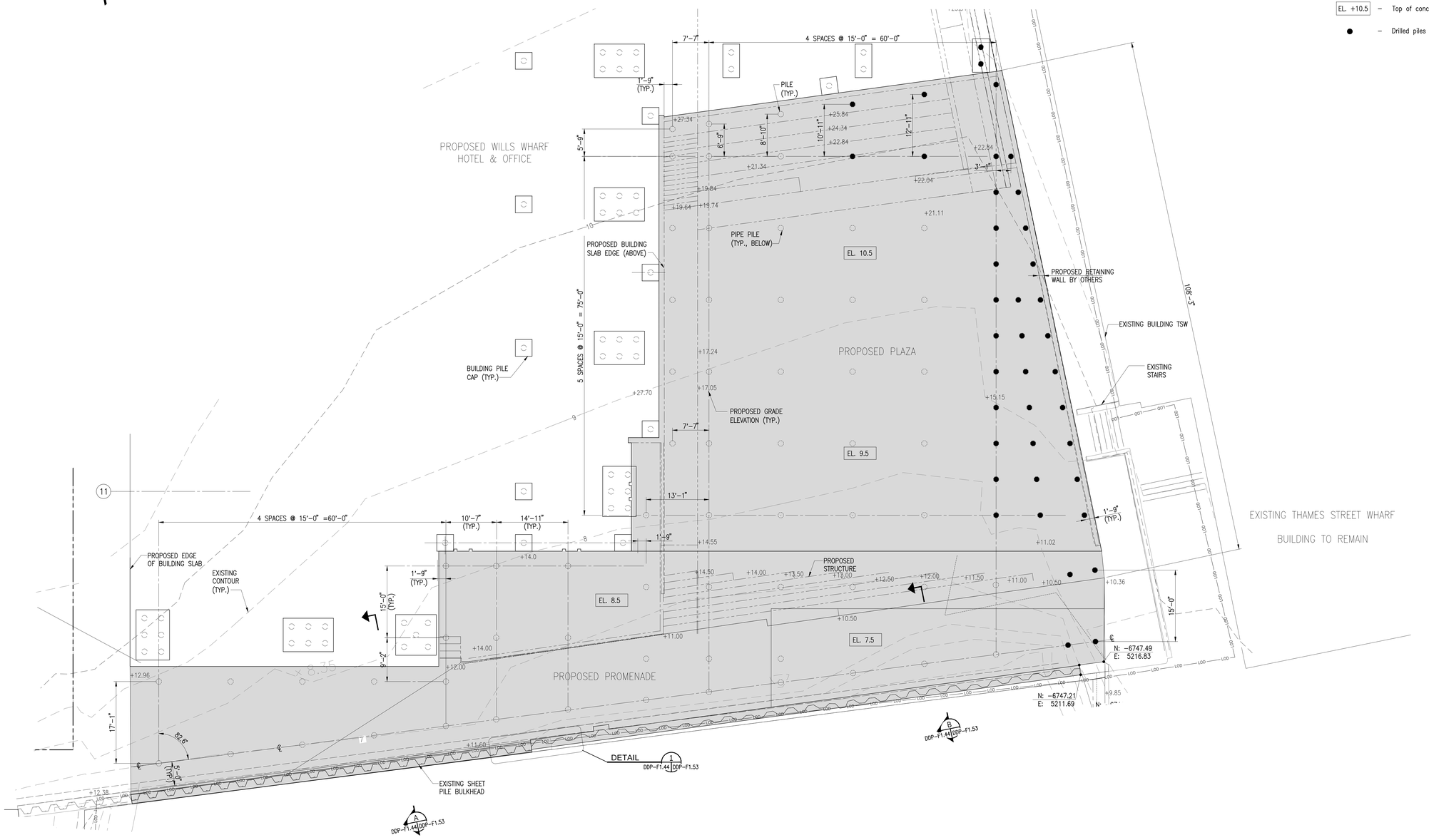

PARTIAL PLAN 3 DDP–F1.40 DDP–F1.44
SCALE: 1/8"=1'–0"

GRAPHIC SCALE
8' 4' 0 8' 16'

BHC ARCHITECTS
BEATTY•HARVEY•COCO ARCHITECTS, LLP
NYC | LONG ISLAND | BALTIMORE
1300 Thames St., Suite 10, Baltimore, Maryland 21231
p: (410) 752-2759

developer
Beatty Development Group
1300 Thames Street, Suite 10
Baltimore, MD 21231
P 410-332-1100

structural engineer
Morris Ritchie & Associates, INC
1220-C East Jappa Road, Suite 505 INC
Towson, MD 21286
P 410-821-1690

mep engineer
JDB Engineering, Inc.
225 International Circle, Suite 102
Hunt Valley, MD 21030
P 410-771-3433

geotech / foundation engineer
Mueser Rutledge Consulting Engineer
225 West 34th St
New York, NY 10122
P 917-339-9300

civil engineer
Morris Ritchie & Associates, INC
14280 Park Center Drive, Suite A
Laurel, MD 20707
P 410-821-1690

landscape architect
Mahan Rykiel Associates
800 Wyman Park Drive, Suite 100
Baltimore, MD 21211
P 410-235-6001

environmental engineer
ERM Group, Inc
200 Harry S Truman Parkway Suite 400
Annapolis, MD 21401
P 410-266-0006

interior designer
Brayton Hughes Design Studios
465 California Street, Suite 350
San Francisco, CA 94104
P 415-343-6108

food service
Cini Little International, Inc
20251 Century Blvd., Suite 375
Germantown, MD 20874
P 301-528-9700

lighting
Grenald Waldron Associates
260 Haverford Avenue, PO Box 525
Narberth, PA 19072
P 610-667-6330

landscape architect
Core Studio Design
1817 Bolton Street
Baltimore, MD 21217
P 410-878-7532

fire protection engineer
Jensen Hughes
3610 Commerce Drive, Suite 817
Baltimore, MD 21227
P 410-737-8677

DETAILED DEVELOPMENT PLAN
(APRIL 29, 2016)

key

NORTH

project
WILLS WHARF OFFICE/HOTEL

HARBOR POINT
BALTIMORE, MARYLAND

seal

issued	date	description

title
FOUNDATION PARTIAL PLAN

drawn by:	E.C.
checked by:	S.Y.
scale:	AS SHOWN
project number:	MRCE - 12582
	scaled inch

sheet number
DDP-F1.44

Tuesday, Sep 20, 2016 – 02:37:40 PM
© Beatty Harvey Coco Architects, LLP
Eugina Cherkasskaya G:\DWGS\125\12582\DDP-F1.44.dwg

Last saved by: echerkasskaya on Tuesday, Sep 20, 2016 – 2:09:06 PM
4/25/2014 1:50:27 PM

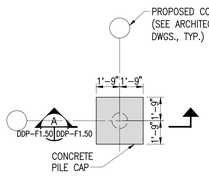

TYPICAL PILE CAP P1 DETAIL
SCALE: NO SCALE

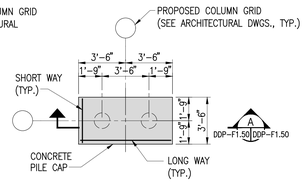

TYPICAL PILE CAP P2 DETAIL
SCALE: NO SCALE

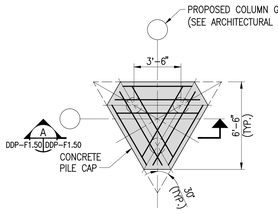

TYPICAL PILE CAP P3 DETAIL
SCALE: NO SCALE

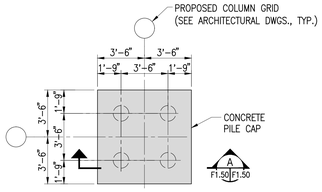

TYPICAL PILE CAP P4 DETAIL
SCALE: NO SCALE

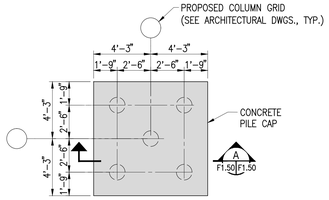

TYPICAL PILE CAP P5 DETAIL
SCALE: NO SCALE

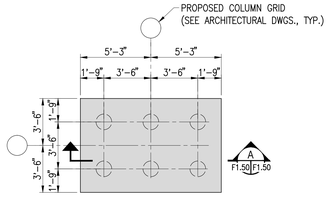

TYPICAL PILE CAP P6 DETAIL
SCALE: NO SCALE

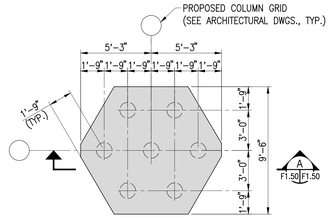

TYPICAL PILE CAP P7 DETAIL
SCALE: NO SCALE

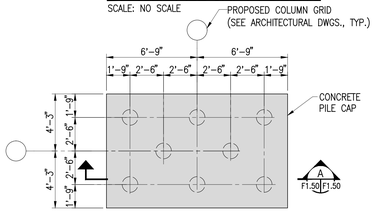

TYPICAL PILE CAP P8 DETAIL
SCALE: NO SCALE

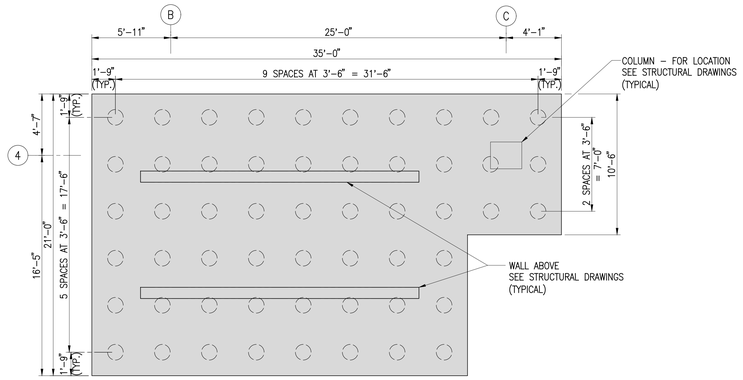

PILE CAP P54 DETAIL
SCALE: 1/4"=1'-0"

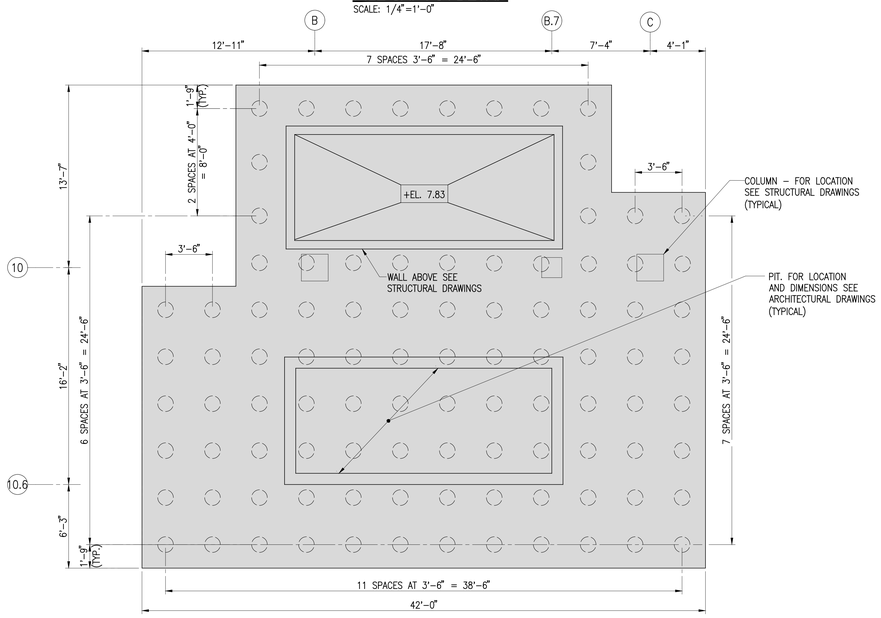

PILE CAP P94 DETAIL
SCALE: 1/4"=1'-0"

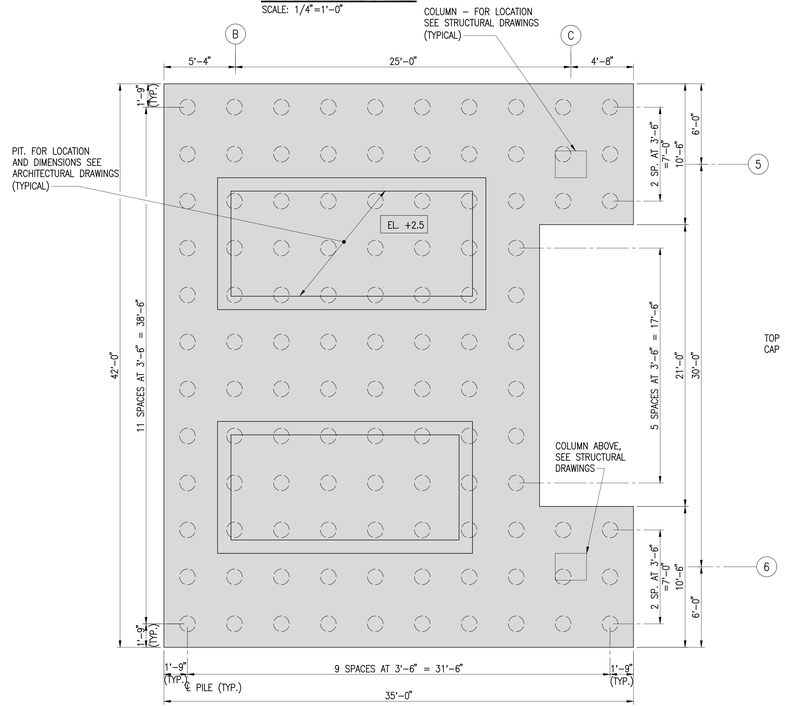

PILE CAP P108 DETAIL
SCALE: 1/4"=1'-0"

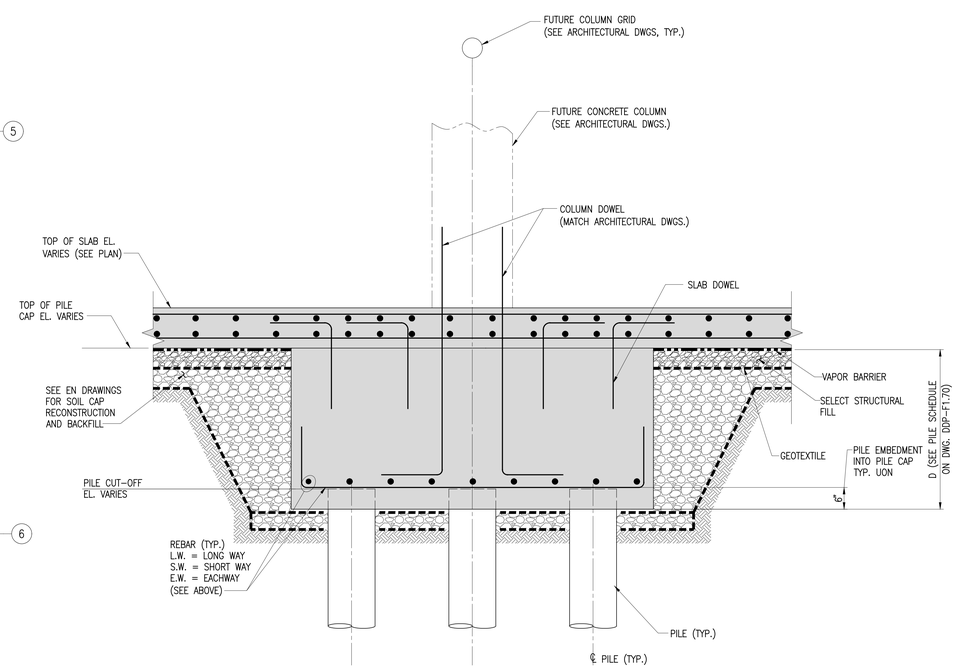

TYPICAL PILE CAP
SECTION A
SCALE:NO SCALE

NOTES:

1. For General and Technical notes, see drawings DDP–F1.01, DDP–F1.02 and DDP–F1.03.
2. For Foundation Plan, see drawing DDP–F1.40.
3. For pile cap depth, see pile schedule.

BHC ARCHITECTS
BEATTY•HARVEY•COCO ARCHITECTS, LLP
NYC | LONG ISLAND | BALTIMORE
1300 Thames St., Suite 10, Baltimore, Maryland 21231
p: (410) 752-2759

developer
Beatty Development Group
1300 Thames Street, Suite 10
Baltimore, MD 21231
P 410-332-1100

structural engineer
Morris Ritchie & Associates, INC
1220-C East Jappa Road, Suite 505 INC
Towson, MD 21286
P 410-821-1690

mep engineer
JDB Engineering, Inc.
225 International Circle, Suite 102
Hunt Valley, MD 21030
P 410-771-3433

geotech / foundation engineer
Mueser Rutledge Consulting Engineer
225 West 34th St
New York, NY 10122
P 917-339-9300

civil engineer
Morris Ritchie & Associates, INC
14280 Park Center Drive, Suite A
Laurel, MD 20707
P 410-821-1690

landscape architect
Mahan Rykiel Associates
800 Wyman Park Drive, Suite 100
Baltimore, MD 21211
P 410-235-6001

environmental engineer
ERM Group, Inc
200 Harry S Truman Parkway Suite 400
Annapolis, MD 21401
P 410-266-0006

interior designer
Brayton Hughes Design Studios
465 California Street, Suite 350
San Francisco, CA 94104
P 415-343-6108

food service
Cini Little International, Inc
20251 Century Blvd., Suite 375
Germantown, MD 20874
P 301-528-9700

lighting
Grenald Waldron Associates
260 Haverford Avenue, PO Box 525
Narberth, PA 19072
P 610-667-6330

landscape architect
Core Studio Design
1817 Bolton Street
Baltimore, MD 21217
P 410-878-7532

fire protection engineer
Jensen Hughes
3610 Commerce Drive, Suite B17
Baltimore, MD 21227
P 410-737-8677

DETAILED
DEVELOPMENT PLAN
(APRIL 29, 2016)

key

NORTH

project
WILLS WHARF
OFFICE/HOTEL

HARBOR POINT
BALTIMORE, MARYLAND

seal

issued	date	description

title
FOUNDATION
DETAILS AND
SECTIONS

drawn by:	E.C.
checked by:	F.L.
scale:	NONE
project number:	MRCE - 12582
sheet number	scaled inch

DDP-F1.50

Tuesday, Sep 20, 2016 – 02:37:43 PM
© Beatty Harvey Coco Architects, LLP
Eugina Cherkasskaya G:\DWGS\125\12582\DDP-F1.50.dwg

Last saved by: echerkasskaya on Tuesday, Sep 20, 2016 – 2:09:56 PM
4/29/2016 1:59:27 PM

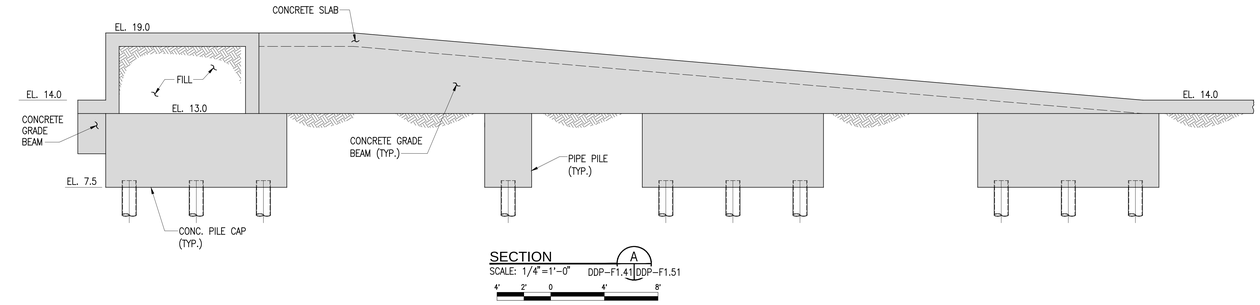

SECTION A
SCALE: 1/4"=1'-0" DDP-F1.41 DDP-F1.51
4' 2' 0 4' 8'

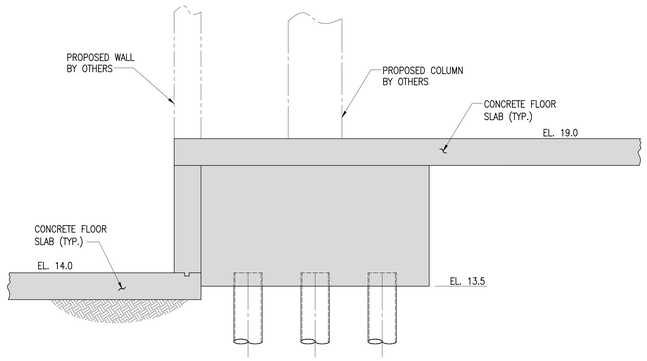

SECTION B
SCALE: 1/2"=1'-0" DDP-F1.41 DDP-F1.51
2' 1' 0 2' 4'

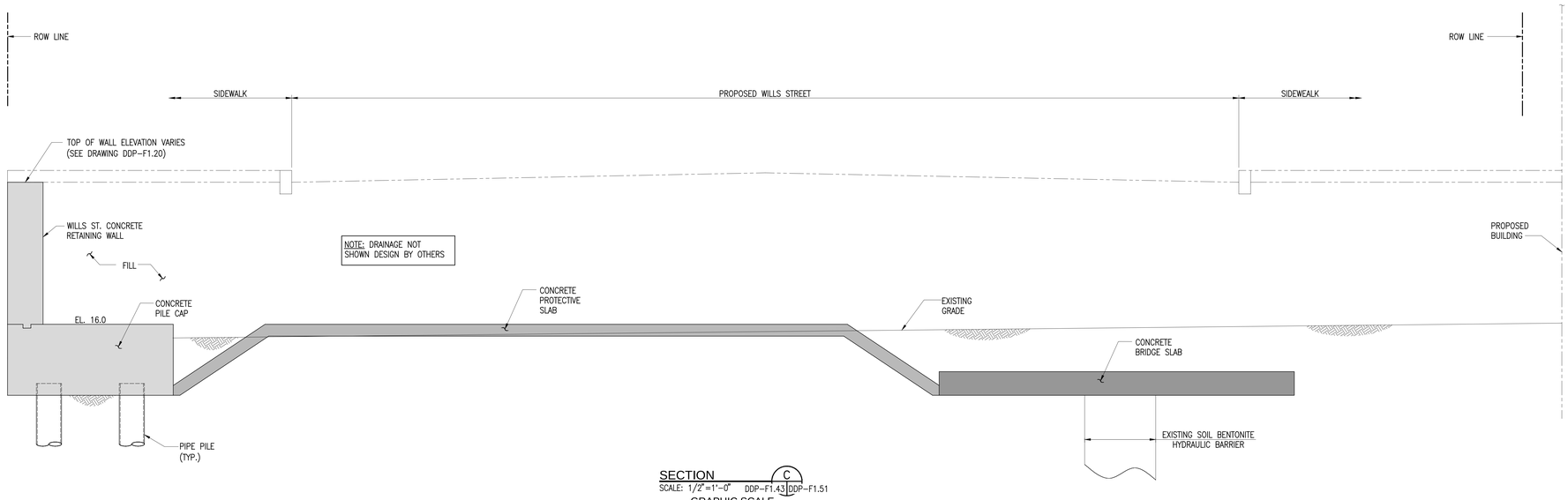

SECTION C
SCALE: 1/2"=1'-0" DDP-F1.43 DDP-F1.51
GRAPHIC SCALE
2' 1' 0 2' 4'

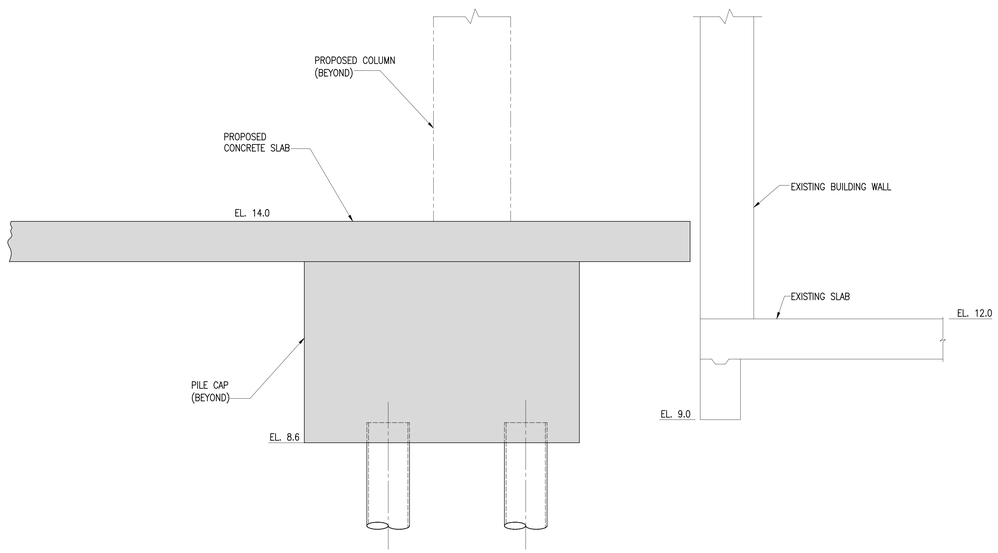

SECTION D
SCALE: 3/4"=1'-0" DDP-F1.41 DDP-F1-51
1' 0 1' 2' 3'

BHC ARCHITECTS
BEATTY•HARVEY•COCO ARCHITECTS, LLP
NYC | LONG ISLAND | BALTIMORE
1300 Thames St., Suite 10, Baltimore, Maryland 21231
p: (410) 752-2759

developer
Beatty Development Group
1300 Thames Street, Suite 10
Baltimore, MD 21231
P 410-332-1100

structural engineer
Morris Ritchie & Associates, INC
1220-C East Jappa Road, Suite 505 INC
Towson, MD 21286
P 410-821-1690

mep engineer
JDB Engineering, Inc.
225 International Circle, Suite 102
Hunt Valley, MD 21030
P 410-771-3433

geotech / foundation engineer
Mueser Rutledge Consulting Engineer
225 West 34th St
New York, NY 10122
P 917-339-9300

civil engineer
Morris Ritchie & Associates, INC
14280 Park Center Drive, Suite A
Laurel, MD 20707
P 410-821-1690

landscape architect
Mahan Rykiel Associates
800 Wyman Park Drive, Suite 100
Baltimore, MD 21211
P 410-235-6001

environmental engineer
ERM Group, Inc
200 Harry S Truman Parkway Suite 400
Annapolis, MD 21401
P 410-266-0006

interior designer
Brayton Hughes Design Studios
465 California Street, Suite 350
San Francisco, CA 94104
P 415-343-6108

food service
Cini Little International, Inc
20251 Century Blvd., Suite 375
Germantown, MD 20874
P 301-528-9700

lighting
Grenald Waldron Associates
260 Haverford Avenue, PO Box 525
Narberth, PA 19072
P 610-667-6330

landscape architect
Core Studio Design
1817 Bolton Street
Baltimore, MD 21217
P 410-878-7532

fire protection engineer
Jensen Hughes
3610 Commerce Drive, Suite B17
Baltimore, MD 21227
P 410-737-8677

DETAILED DEVELOPMENT PLAN
(APRIL 29, 2016)

key

NORTH

project
WILLS WHARF
OFFICE/HOTEL

HARBOR POINT
BALTIMORE, MARYLAND

seal

issued	date	description

title
FOUNDATION DETAILS AND SECTIONS

drawn by:	E.C.
checked by:	S.Y.
scale:	AS SHOWN
project number:	MRCE - 12582
	scaled inch

sheet number
DDP-F1.51

Tuesday, Sep 20, 2016 – 02:37:53 PM
© Beatty Harvey Coco Architects, LLP
Eugina Cherkasskaya G:\DWGS\125\12582\DDP-F1.51.dwg

Last saved by: echerkasskaya on Tuesday, Sep 20, 2016 – 2:10:45 PM
4/29/2016 1:59:27 PM

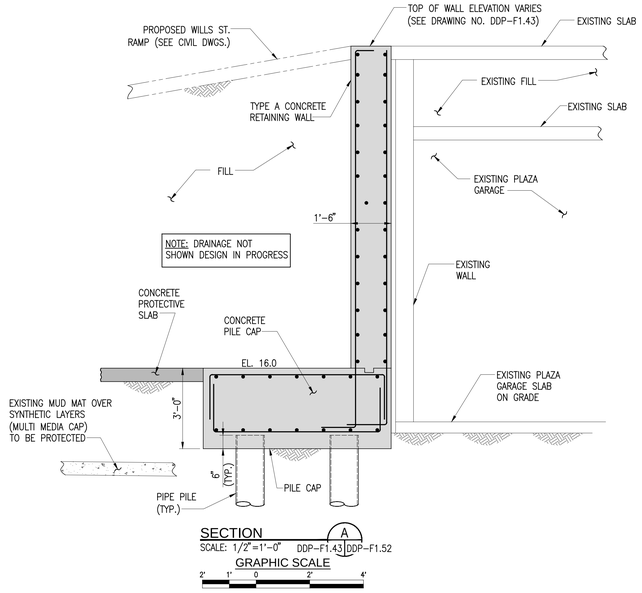

SECTION A
SCALE: 1/2"=1'–0" DDP–F1.43 DDP–F1.52
GRAPHIC SCALE

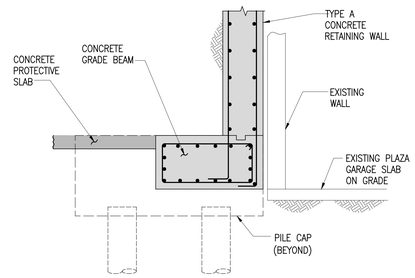

SECTION B
SCALE: 1/2"=1'–0" DDP–F1.43 DDP–F1.52
GRAPHIC SCALE

NOTES:

1. For General and Technical notes, see drawings DDP–F1.01, DDP–F1.02 and DDP–F1.03.
2. For Foundation Plan, see drawing DDP–F1.40.
3. For Typical concrete bridge slab and concrete protective slab plan see drawing DDP–F1.20.

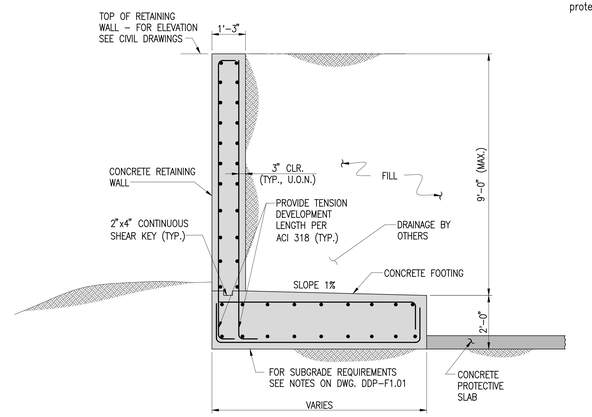

SECTION D
SCALE: 1/2"=1'–0" DDP–F1.43 DDP–F1.52
GRAPHIC SCALE

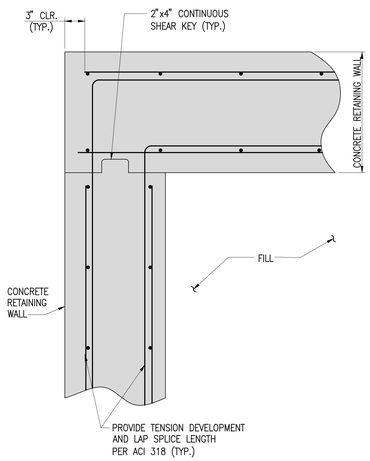

DETAIL 1
SCALE: 1 1/2"=1'–0" DDP–F1.43 DDP–F1.52
GRAPHIC SCALE

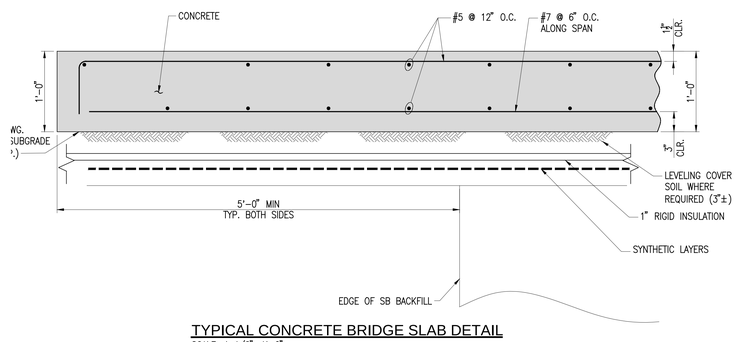

TYPICAL CONCRETE BRIDGE SLAB DETAIL
SCALE: 1 1/2"=1'–0"
GRAPHIC SCALE

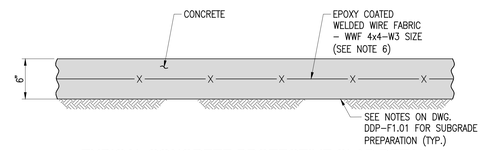

TYPICAL CONCRETE PROTECTIVE SLAB DETAIL
SCALE: 1 1/2"=1'–0"

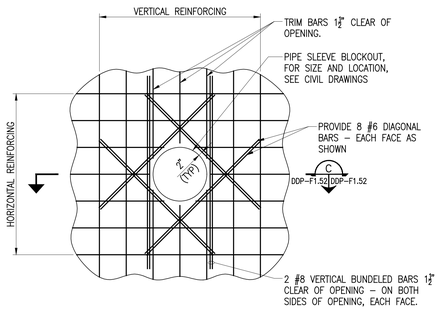

TYPICAL DETAIL AT PIPE SLEEVE BLOCKOUT
NO SCALE

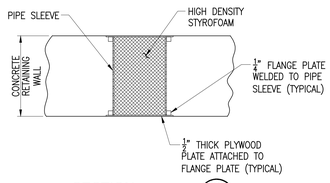

SECTION C
SCALE: 1/2"=1'–0" DDP–F1.52 DDP–F1.52
GRAPHIC SCALE

GB1 GB2

NOTE: PROVIDE TENSION DEVELOPMENT LENGTH INTO PILE CAP AT BOTH ENDS OF BEAM FOR TOP, BOTTOM AND SIDE FACE REINFORCEMENT.

TYPICAL GRADE BEAM DETAIL
SCALE: 1/2"=1'–0"
GRAPHIC SCALE

BHC ARCHITECTS
BEATTY•HARVEY•COCO ARCHITECTS, LLP
NYC | LONG ISLAND | BALTIMORE
1300 Thames St., Suite 10, Baltimore, Maryland 21231
p: (410) 752-2759

developer
Beatty Development Group
1300 Thames Street, Suite 10
Baltimore, MD 21231
P 410-332-1100

structural engineer
Morris Ritchie & Associates, INC
1220-C East Jappa Road, Suite 505 INC
Towson, MD 21286
P 410-821-1690

mep engineer
JDB Engineering, Inc.
225 International Circle, Suite 102
Hunt Valley, MD 21030
P 410-771-3433

geotech / foundation engineer
Mueser Rutledge Consulting Engineer
225 West 34th St
New York, NY 10122
P 917-339-9300

civil engineer
Morris Ritchie & Associates, INC
14280 Park Center Drive, Suite A
Laurel, MD 20707
P 410-821-1690

landscape architect
Mahan Rykiel Associates
800 Wyman Park Drive, Suite 100
Baltimore, MD 21211
P 410-235-6001

environmental engineer
ERM Group, Inc
200 Harry S Truman Parkway Suite 400
Annapolis, MD 21401
P 410-266-0006

interior designer
Brayton Hughes Design Studios
465 California Street, Suite 350
San Francisco, CA 94104
P 415-343-6108

food service
Cini Little International, Inc
20251 Century Blvd., Suite 375
Germantown, MD 20874
P 301-528-9700

lighting
Grenald Waldron Associates
260 Haverford Avenue, PO Box 525
Narberth, PA 19072
P 610-667-6330

landscape architect
Core Studio Design
1817 Bolton Street
Baltimore, MD 21217
P 410-878-7532

fire protection engineer
Jensen Hughes
3610 Commerce Drive, Suite B17
Baltimore, MD 21227
P 410-737-8677

DETAILED DEVELOPMENT PLAN
(APRIL 29, 2016)

key

project
WILLS WHARF OFFICE/HOTEL

HARBOR POINT
BALTIMORE, MARYLAND

seal

issued	date	description

title
FOUNDATION DETAILS AND SECTIONS

drawn by:	E.C.
checked by:	S.Y.
scale:	AS SHOWN
project number:	MRCE - 12582
	scaled inch

sheet number
DDP-F1.52

Tuesday, Sep 20, 2016 – 02:37:58 PM
© Beatty Harvey Coco Architects, LLP
Eugina Cherkasskaya G:\DWGS\125\12582\DDP-F1.52.dwg

Last saved by: echerkasskaya on Tuesday, Sep 20, 2016 – 2:11:47 PM
4/29/2016 1:59:27 PM

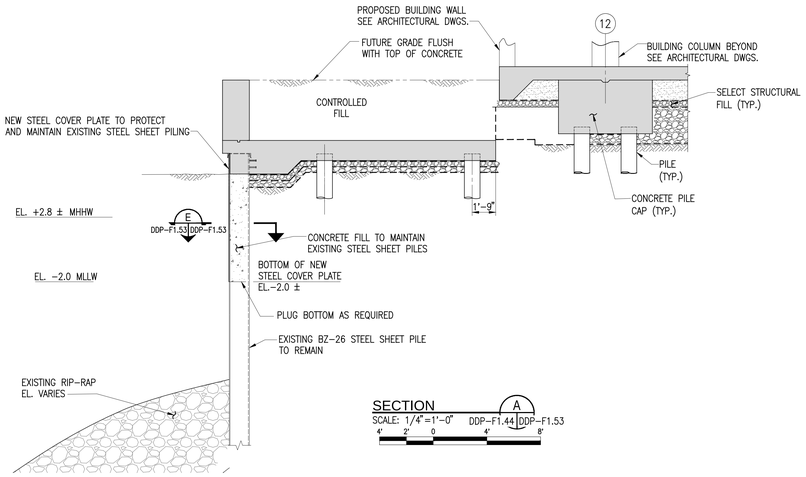

SECTION A
SCALE: 1/4"=1'-0" DDP-F1.44 DDP-F1.53
4' 2' 0 4' 8'

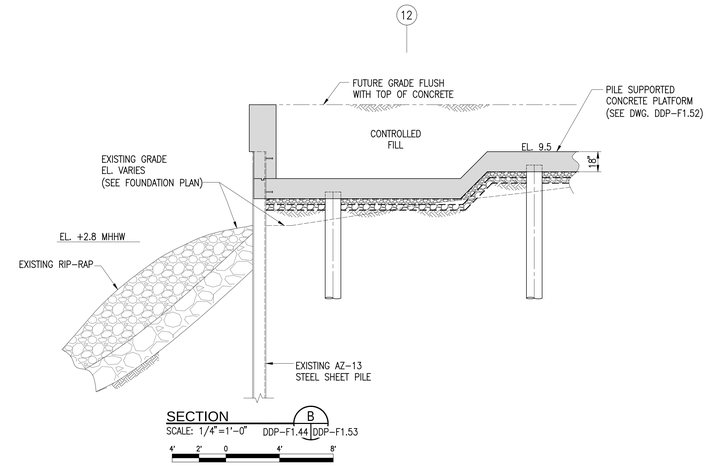

SECTION B
SCALE: 1/4"=1'-0" DDP-F1.44 DDP-F1.53
4' 2' 0 4' 8'

NOTES:

1. For General and Technical notes, see drawings DDP-F1.01, DDP-F1.02 and DDP-F1.03.
2. For Foundation Plan, see drawing DDP-F1.40.

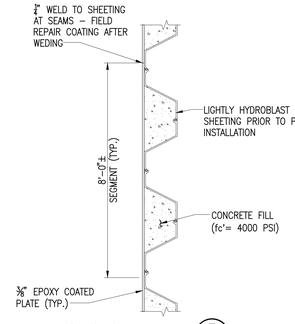

SECTION E
SCALE: 1/2"=1'-0" DDP-F1.53 DDP-F1.53
2' 1' 0 2' 4'

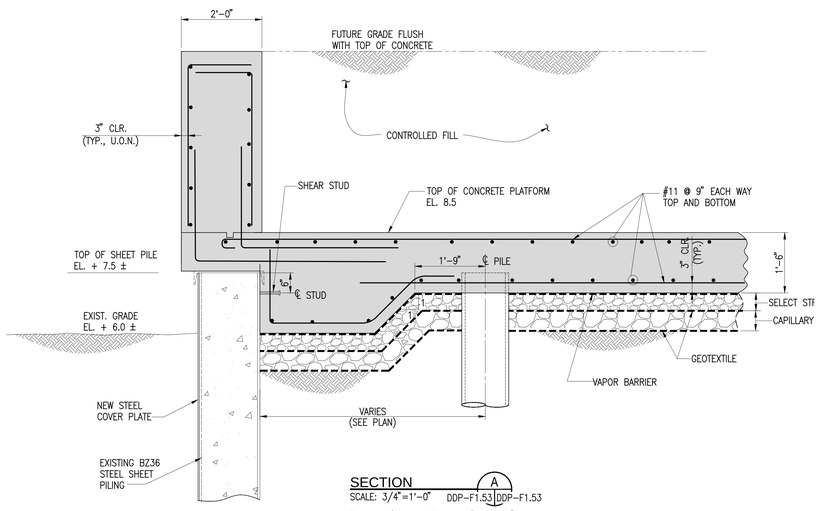

SECTION A
SCALE: 3/4"=1'-0" DDP-F1.53 DDP-F1.53
1' 0 1' 2' 3'

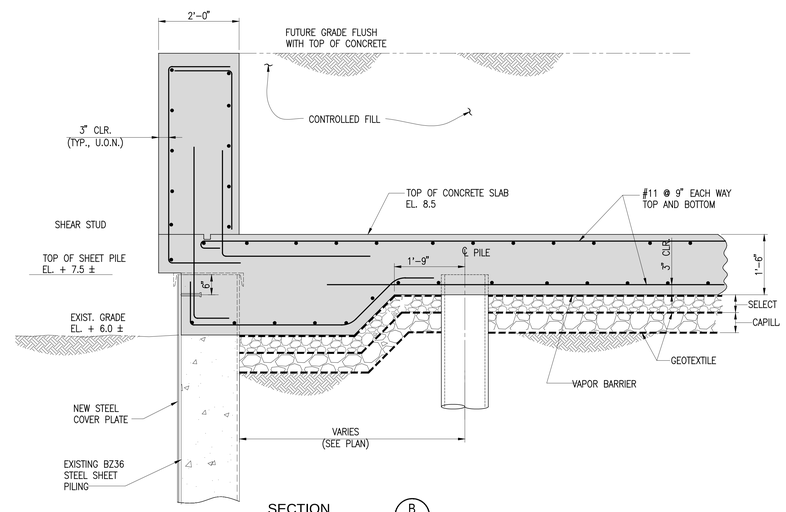

SECTION B
SCALE: 3/4"=1'-0" DDP-F1.53 DDP-F1.53
1' 0 1' 2' 3'

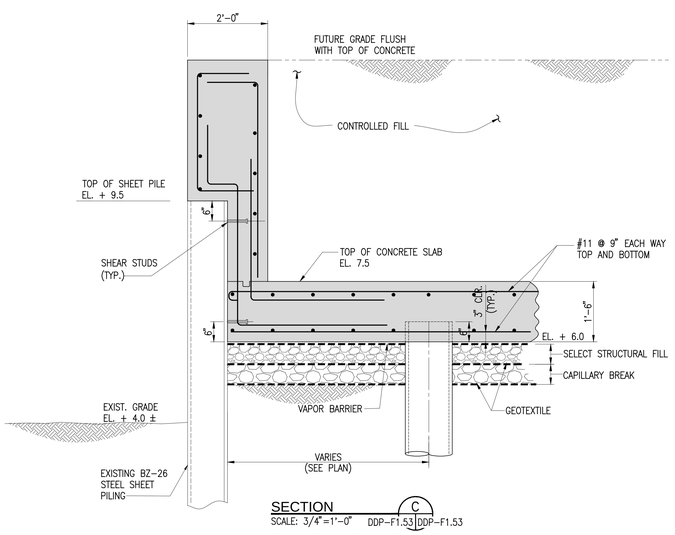

SECTION C
SCALE: 3/4"=1'-0" DDP-F1.53 DDP-F1.53
1' 0 1' 2' 3'

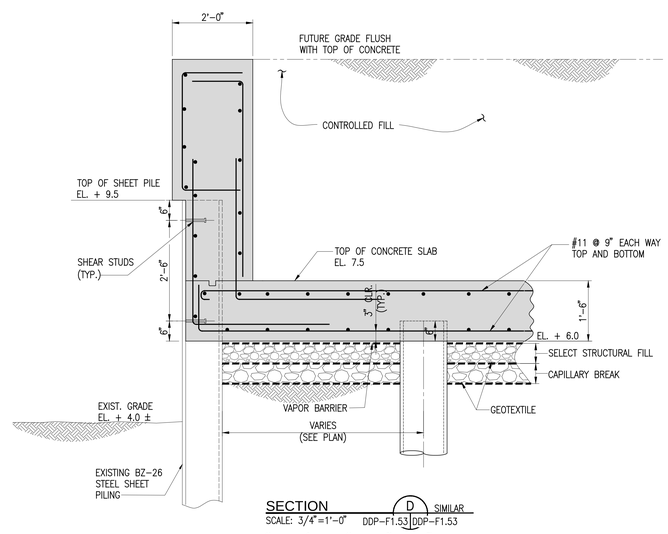

SECTION D SIMILAR
SCALE: 3/4"=1'-0" DDP-F1.53 DDP-F1.53
1' 0 1' 2' 3'

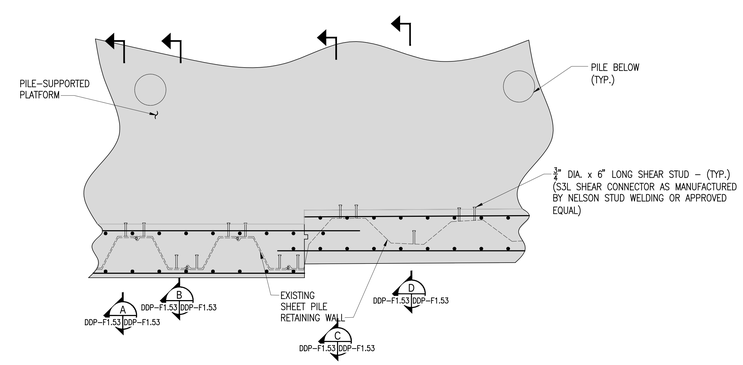

DETAIL 1
SCALE: 1/2"=1'-0" DDP-F1.44 DDP-F1.53
GRAPHIC SCALE
2' 1' 0 2' 4'

BHC ARCHITECTS
BEATTY•HARVEY•COCO ARCHITECTS, LLP
NYC | LONG ISLAND | BALTIMORE
1300 Thames St., Suite 10, Baltimore, Maryland 21231
p: (410) 752-2759

developer
Beatty Development Group
1300 Thames Street, Suite 10
Baltimore, MD 21231
P 410-332-1100

structural engineer
Morris Ritchie & Associates, INC
1220-C East Jappa Road, Suite 505 INC
Towson, MD 21286
P 410-821-1690

mep engineer
JDB Engineering, Inc.
225 International Circle, Suite 102
Hunt Valley, MD 21030
P 410-771-3433

geotech / foundation engineer
Mueser Rutledge Consulting Engineer
225 West 34th St
New York, NY 10122
P 917-339-9300

civil engineer
Morris Ritchie & Associates, INC
14280 Park Center Drive, Suite A
Laurel, MD 20707
P 410-821-1690

landscape architect
Mahan Rykiel Associates
800 Wyman Park Drive, Suite 100
Baltimore, MD 21211
P 410-235-6001

environmental engineer
ERM Group, Inc
200 Harry S Truman Parkway Suite 400
Annapolis, MD 21401
P 410-266-0006

interior designer
Brayton Hughes Design Studios
465 California Street, Suite 350
San Francisco, CA 94104
P 415-343-6108

food service
Cini Little International, Inc
20251 Century Blvd., Suite 375
Germantown, MD 20874
P 301-528-9700

lighting
Grenald Waldron Associates
260 Haverford Avenue, PO Box 525
Narberth, PA 19072
P 610-667-6330

landscape architect
Core Studio Design
1817 Bolton Street
Baltimore, MD 21217
P 410-878-7532

fire protection engineer
Jensen Hughes
3610 Commerce Drive, Suite B17
Baltimore, MD 21227
P 410-737-8677

DETAILED
DEVELOPMENT PLAN
(APRIL 29, 2016)

key

project
WILLS WHARF
OFFICE/HOTEL

HARBOR POINT
BALTIMORE, MARYLAND

seal

issued	date	description

title
FOUNDATION DETAILS AND SECTIONS

drawn by:	E.C.
checked by:	S.Y.
scale:	AS SHOWN
project number:	MRCE - 12582
	scaled inch

sheet number
DDP-F1.53

Tuesday, Sep 20, 2016 – 02:38:22 PM
© Beatty Harvey Coco Architects, LLP
Eugina Cherkasskaya G:\DWGS\125\12582\DDP-F1.53.dwg

Last saved by: echerkasskaya on Tuesday, Sep 20, 2016 – 2:12:33 PM
4/29/2016 1:59:27 PM

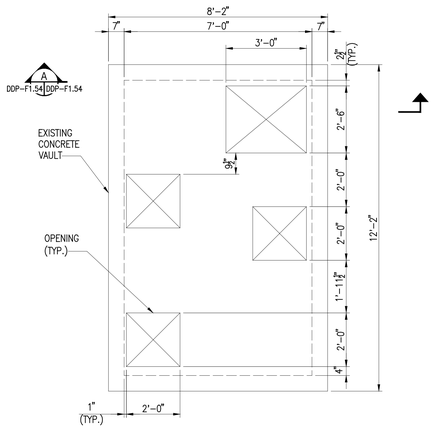

EXISTING CONDITION AT VAULT V3 & V4

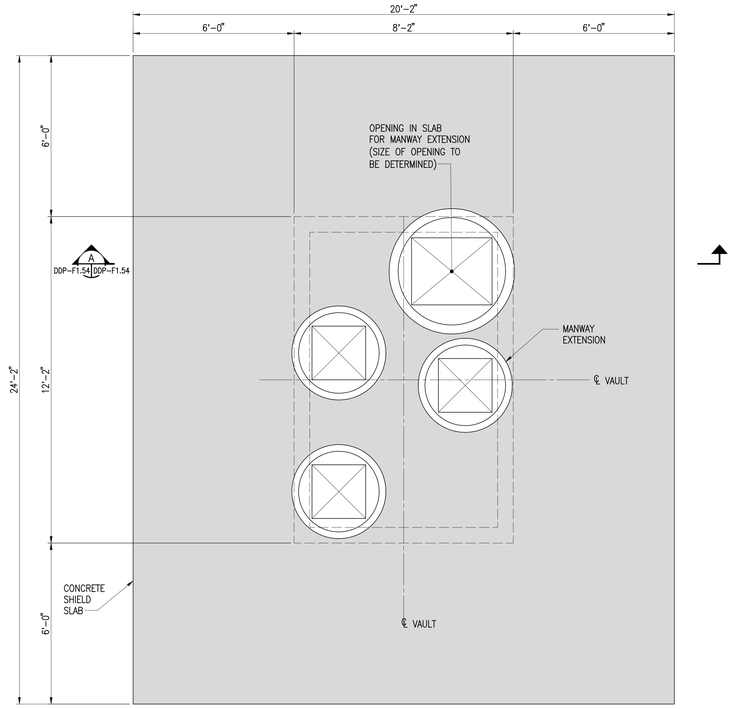

PROPOSED CONDITION AT V3

DETAIL 1
SCALE: 1/2"=1'-0" DDP-F1.40 DDP-F1.54

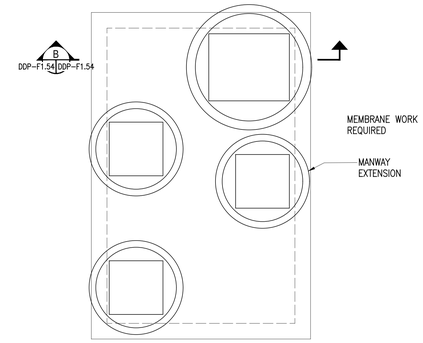

PROPOSED CONDITION AT V4

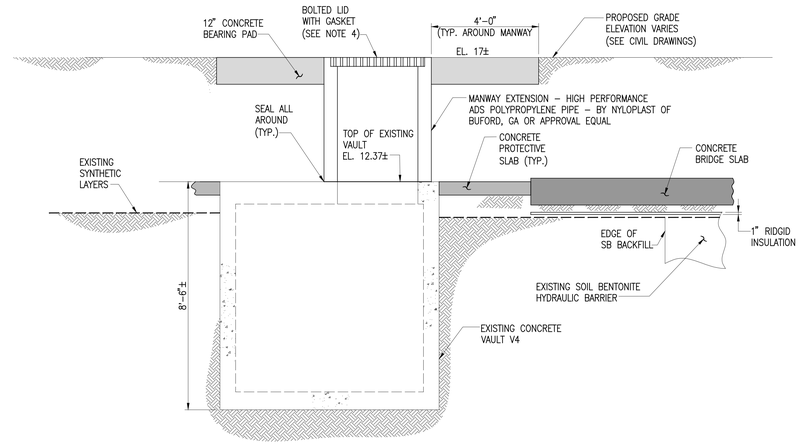

SECTION B AT VAULT V4
SCALE: 1/2"=1'-0" DDP-F1.54 DDP-F1.54

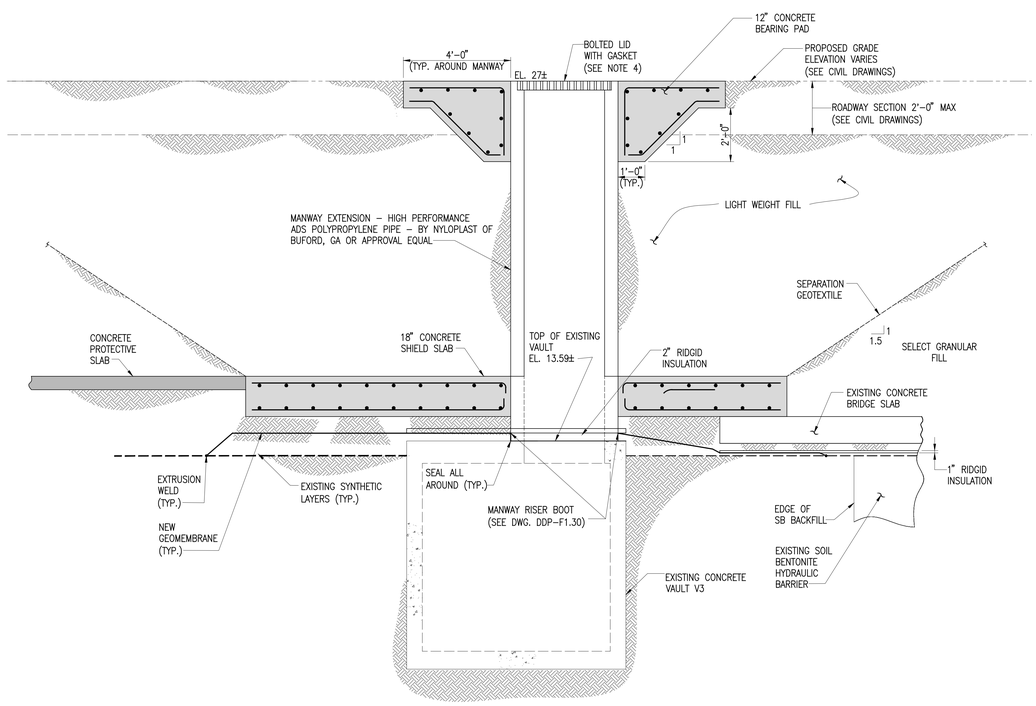

SECTION A AT VAULT V3
SCALE: 1/2"=1'-0" DDP-F1.54 DDP-F1.54

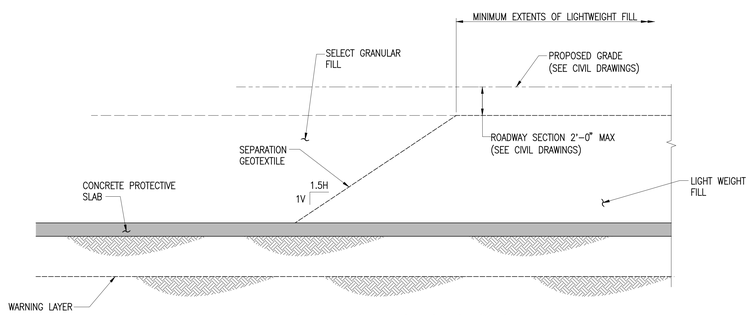

TYPICAL FILL TRANSITION SECTION
SCALE: 1/2"=1'-0"

NOTES:

1. For General and Technical notes, see drawings DDP-F1.01, DDP-F1.02 and DDP-F1.03.
2. For Foundation Plan, see drawing DDP-F1.40.
3. All structural steel shall be coated with bitumastic 300 M or approval equal. See General notes for additional information.
4. Metal frame and cover shall be removed and stored for reuse.
5. See on series drawings for work inside manway and vault.

BHC ARCHITECTS
BEATTY•HARVEY•COCO ARCHITECTS, LLP
NYC | LONG ISLAND | BALTIMORE
1300 Thames St., Suite 10, Baltimore, Maryland 21231
p: (410) 752-2759

developer
Beatty Development Group
1300 Thames Street, Suite 10
Baltimore, MD 21231
P 410-332-1100

structural engineer
Morris Ritchie & Associates, INC
1220-C East Jappa Road, Suite 505 INC
Towson, MD 21286
P 410-821-1690

mep engineer
JDB Engineering, Inc.
225 International Circle, Suite 102
Hunt Valley, MD 21030
P 410-771-3433

geotech / foundation engineer
Mueser Rutledge Consulting Engineer
225 West 34th St
New York, NY 10122
P 917-339-9300

civil engineer
Morris Ritchie & Associates, INC
14280 Park Center Drive, Suite A
Laurel, MD 20707
P 410-821-1690

landscape architect
Mahan Rykiel Associates
800 Wyman Park Drive, Suite 100
Baltimore, MD 21211
P 410-235-6001

environmental engineer
ERM Group, Inc
200 Harry S Truman Parkway Suite 400
Annapolis, MD 21401
P 410-266-0006

interior designer
Brayton Hughes Design Studios
465 California Street, Suite 350
San Francisco, CA 94104
P 415-343-6108

food service
Cini Little International, Inc
20251 Century Blvd., Suite 375
Germantown, MD 20874
P 301-528-9700

lighting
Grenald Waldron Associates
260 Haverford Avenue, PO Box 525
Narberth, PA 19072
P 610-667-6330

landscape architect
Core Studio Design
1817 Bolton Street
Baltimore, MD 21217
P 410-878-7532

fire protection engineer
Jensen Hughes
3610 Commerce Drive, Suite B17
Baltimore, MD 21227
P 410-737-8677

DETAILED DEVELOPMENT PLAN
(APRIL 29, 2016)

key

NORTH

project
WILLS WHARF OFFICE/HOTEL

HARBOR POINT
BALTIMORE, MARYLAND

seal

issued	date	description

title
FOUNDATION DETAILS AND SECTIONS

drawn by:	E.C.
checked by:	S.Y.
scale:	AS SHOWN
project number:	MRCE - 12582
	scaled inch

sheet number
DDP-F1.54

Tuesday, Sep 20, 2016 – 02:38:27 PM
© Beatty Harvey Coco Architects, LLP

Last saved by: echerkasskaya on Tuesday, Sep 20, 2016 – 2:13:19 PM
4/29/2016 1:39:27 PM

PILE SCHEDULE

Foundation Location		Pile Diameter (Inches)	Pile Cap Designation	Top of Pile Cap EL.	Pile Cap Depth (Feet)	Pile Cut-Off EL.	Estimated Top of S4 Strata EL.	Estimated Tip EL.	Estimated Pile Length (Feet)	Estimated Pile Order Length (Feet)
Single column pile caps	1–A	14	P2	13.0	9.50	10.0	–54	–58	68	72
	1–B	14	P2	13.0	9.50	10.0	–54	–58	68	72
	1–C	14	P2	13.0	9.50	10.0	–54.5	–59	69	73
	1–D	14	P4	13.0	9.00	9.5	–54.5	–59	68	72
	1–E	14	P3	13.0	9.00	9.5	–54.5	–59	68	72
	2–A	14	P6	13.0	7.50	8.0	–54	–58	66	70
	2–B	14	P6	13.0	7.50	8.0	–54	–58	66	70
	2–C	14	P4	13.0	9.00	9.5	–54.5	–59	68	72
	3–A	14	P6	13.0	7.50	8.0	–54	–58	66	70
	3–B	14	P7	13.0	7.50	8.0	–54	–58	66	70
	3–C	14	P8	13.0	7.50	8.0	–54	–58	66	70
	3–D	14	P6	13.0	7.50	8.0	–54.5	–59	67	71
	3–E	14	P3	13.0	9.00	9.5	–55	–59	69	73
	4–A	14	P8	13.0	7.50	8.0	–54	–58	66	70
	4–D	14	P6	13.0	7.50	8.0	–55	–59	67	71
	4–E	14	P3	13.0	9.00	9.5	–55.5	–60	69	73
	4–F.5	14	P8	13.0	7.50	8.0	–56	–60	68	72
	5–A	14	P7	13.0	7.50	8.0	–54	–58	66	70
	5–D	14	P6	13.0	7.50	8.0	–55.5	–60	68	72
	5–E	14	P3	13.0	9.00	9.5	–56	–60	70	74
	5–G	14	P6	13.0	7.60	8.0	–57	–61	69	73
	6–A	14	P8	13.0	7.50	8.0	–54	–58	66	70
	6–D	14	P6	13.0	7.50	8.0	–56	–60	68	72
	6–E	14	P3	13.0	9.00	9.5	–56.5	–61	70	74
	6–F	14	P6	13.0	7.50	8.0	–57.5	–62	70	74
	6–H	14	P4	13.0	9.00	9.5	–57.5	–62	71	75
	6.5–H	14	P4	13.0	9.00	9.5	–57.5	–62	71	75
	7–A	14	P8	13.0	7.50	8.0	–54.5	–59	67	71
	7–B	14	P8	13.0	7.50	8.0	–55	–59	67	71
	7–C	14	P8	13.0	7.50	8.0	–55.5	–60	68	72
	7–D	14	P6	13.0	7.50	8.0	–56.5	–61	69	73
	7–E	14	P2	13.0	9.50	10.0	–57.5	–62	72	76
	7–F	14	P4	13.0	9.00	9.5	–57.5	–62	71	75
	8–A	14	P8	13.0	7.50	8.0	–55	–59	67	71
	8–B	14	P8	13.0	7.50	8.0	–56	–60	68	72
	8–C	14	P8	13.0	7.50	8.0	–56.5	–61	69	73
	8–D	14	P6	13.0	7.50	8.0	–57.5	–62	70	74
	8–E	14	P2	13.0	9.50	10.0	–58	–62	72	76
	8–F	14	P2	13.0	9.50	10.0	–58.5	–63	73	77
	9–A	14	P8	13.0	7.50	8.0	–56	–60	68	72
	9–B	14	P7	13.0	7.50	8.0	–57	–61	69	73
	9–C	14	P7	13.0	7.50	8.0	–57.5	–62	70	74
	9–D	14	P6	13.0	7.50	8.0	–58.5	–63	71	75
	9.3–B	14	P4	13.0	9.00	9.5	–57.5	–62	71	75
	9.3–B.7	14	P3	13.0	9.00	9.5	–57.5	–62	71	75
	10–A	14	P7	13.0	7.50	8.0	–56.5	–61	69	73
	10–D	14	P6	13.0	7.50	8.0	–59.5	–64	72	76
	11–A.3	14	P7	13.0	7.50	8.0	–58	–62	70	74
	11–B	14	P6	13.0	7.50	8.0	–59	–63	71	75
	11–C	14	P7	13.0	7.50	8.0	–60	–64	72	76
	11–D	14	P6	13.0	7.50	8.0	–60	–64	72	76
	12–A.3	14	P6	13.0	7.50	8.0	–58.5	–63	71	75
	12–B	14	P6	13.0	7.50	8.0	–60	–64	72	76
	12–B.9	14	P5	13.0	8.00	8.5	–61	–65	74	78
	1.8–E.9	14	P8	13.0	7.50	8.0	–55	–59	67	71
Shear Walls	P54	14	P54	13.0	4.00	4.5	–54	–58	63	67
	P108	14	P108	13.0	4.00	4.5	–54.5	–59	63	67
	P94	14	P94	13.0	4.00	4.5	–58.5	–63	67	71
Floor Support Piles	1–A.5	14	P1	13.0	4.00	4.5	–54	–58	63	67
	1–C.5	14	P1	13.0	10.00	10.5	–54.5	–59	69	73
	0.5–F	14	P2	13.0	9.50	10.0	–55	–59	69	73
	0.5–G.9	14	P2	13.0	9.50	10.0	–55.5	–60	70	74
	2–A.5	14	P1	13.0	10.00	10.5	–54	–58	69	73
	2–C.5	14	P1	13.0	10.00	10.5	–54.5	–59	69	73
	2.5–G.9	14	P2	13.0	9.50	10.0	–55.5	–60	70	74
	3–A.5	14	P1	13.0	10.00	10.5	–54	–58	69	73
	3–C.5	14	P1	13.0	10.00	10.5	–54.5	–59	69	73
	3.1–F	14	P2	13.0	9.50	10.0	–55.5	–60	70	74
	3.5–B.9	14	P2	13.0	9.50	10.0	–54	–58	68	72
	4–A.5	14	P1	13.0	10.00	10.5	–54	–58	69	73
	4–C.5	14	P1	13.0	10.00	10.5	–54.5	–59	69	73
	5–A.5	14	P1	13.0	10.00	10.5	–54	–58	69	73
	5–C.5	14	P1	13.0	10.00	10.5	–55	–59	70	74
	6–A.5	14	P2	13.0	9.50	10.0	–54	–58	68	72
	6–C.5	14	P1	13.0	10.00	10.5	–55.5	–60	70	74
	7–A.5	14	P2	13.0	9.50	10.0	–54.5	–59	69	73
	7–C.5	14	P1	13.0	10.00	10.5	–56.5	–61	71	75
	7–H	14	P2	13.0	9.50	10.0	–58	–62	72	76
	8–A.5	14	P1	13.0	10.00	10.5	–55.5	–60	70	74
	8–C.5	14	P1	13.0	10.00	10.5	–57	–61	72	76
	8–H.5	14	P2	13.0	9.50	10.0	–58.5	–63	73	77
	8.2–D.2	14	P1	13.0	10.00	10.5	–58	–62	73	77
	9–A.5	14	P1	13.0	10.00	10.5	–56.5	–61	71	75
	9–C.5	14	P1	13.0	10.00	10.5	–58	–62	73	77
	10–A.5	14	P1	13.0	10.00	10.5	–57.5	–62	72	76
	10–C.5	14	P1	13.0	10.00	10.5	–59	–63	74	78
	11–C.5	14	P2	13.0	9.50	10.0	–60.5	–65	75	79
	11.3–C.2	14	P1	13.0	10.00	10.5	–60.5	–65	75	79
	11.3–C.5	14	P1	13.0	10.00	10.5	–60.5	–65	75	79
	11.3–D.2	14	P1	13.0	10.00	10.5	–60	–64	75	79
Plaza Pile Supported Platform		14	101	10.5	9.00	9.5	–58	–62	72	76
Wills Street Retaining Wall Pile Caps		14	P4	16.0	12.00	12.5	–40	–44	57	61
		14	P4	16.0	12.00	12.5	–40	–44	57	61
		14	P4	16.0	12.00	12.5	–40	–44	57	61
		14	P3	16.0	11.50	12.0	–40	–44	56	60
		14	P3	16.0	11.50	12.0	–40	–44	56	60
		14	P3	16.0	11.50	12.0	–39	–43	55	59
		14	P3	16.0	11.50	12.0	–38	–42	54	58
		14	P3	16.0	11.50	12.0	–37	–41	53	57
		14	P2	16.0	11.50	12.0	–36	–40	52	56
		14	P2	16.0	11.50	12.0	–36	–40	52	56
		14	P2	16.0	11.50	12.0	–35	–39	51	55
		14	P2	16.0	11.50	12.0	–36	–40	52	56
		14	P2	16.0	11.50	12.0	–36	–40	52	56
		14	P2	16.0	11.50	12.0	–35	–39	51	55
		14	P2	16.0	11.50	12.0	–36	–40	52	56
		14	P2	16.0	11.50	12.0	–35	–39	51	55
Additional pile caps not included on schedule										

NOTES:

1. Piles shown as 14 inch OD Piles shall be – 14 inch OD Pipe x $\frac{3}{8}$" Wall ASTM A252 Grade (Fy = 45ksi) with Conical Tip Filled with Concrete (fc'=4000 psi).
2. Conical tip shall be P–13006 Conical Point inside flange as manufactured by Associated Pile and Fitting or approved equal.
3. Conical tip shall be full penetration welded to steel pipe.
4. Steel grade of conical tip shall match that of pipe.
5. Pile Lengths shown are based on pile lengths estimated from cut off elevation to an estimated tip elevation and do not include the additional length that may be required for installing piles from existing grades.
6. For Shear Wall Pile Caps see drawings F1.50.
7. Top of Pile Cap Elevation shown on schedule is calculated as:
   a. Top of Floor Slab minus 1 foot for Wills Wharf Building and Garage
      Where top of floor slab elevation varies across the Pile Cap footprint, the lowest top of floor slab elevation minus 1 foot.
   b. El. +16.0 for the Wills Street Returning Wall Pile Caps.
   c. Top of Plaza Concrete platform for Plaza Platform Piles.
8. All floor slab elevations have been obtained from architectural drawings.

Abbreviations:

P6 – Pile Cap with 6 Piles

BHC ARCHITECTS
BEATTY•HARVEY•COCO ARCHITECTS, LLP
NYC | LONG ISLAND | BALTIMORE
1300 Thames St., Suite 10, Baltimore, Maryland 21231
p: (410) 752-2759

developer
Beatty Development Group
1300 Thames Street, Suite 10
Baltimore, MD 21231
P 410-332-1100

structural engineer
Morris Ritchie & Associates, INC
1220-C East Jappa Road, Suite 505 INC
Towson, MD 21286
P 410-821-1690

mep engineer
JDB Engineering, Inc.
225 International Circle, Suite 102
Hunt Valley, MD 21030
P 410-771-3433

geotech / foundation engineer
Mueser Rutledge Consulting Engineer
225 West 34th St
New York, NY 10122
P 917-339-9300

civil engineer
Morris Ritchie & Associates, INC
14280 Park Center Drive, Suite A
Laurel, MD 20707
P 410-821-1690

landscape architect
Mahan Rykiel Associates
800 Wyman Park Drive, Suite 100
Baltimore, MD 21211
P 410-235-6001

environmental engineer
ERM Group, Inc
200 Harry S Truman Parkway Suite 400
Annapolis, MD 21401
P 410-266-0006

interior designer
Brayton Hughes Design Studios
465 California Street, Suite 350
San Francisco, CA 94104
P 415-343-6108

food service
Cini Little International, Inc
20251 Century Blvd., Suite 375
Germantown, MD 20874
P 301-528-9700

lighting
Grenald Waldron Associates
260 Haverford Avenue, PO Box 525
Narberth, PA 19072
P 610-667-6330

landscape architect
Core Studio Design
1817 Bolton Street
Baltimore, MD 21217
P 410-878-7532

fire protection engineer
Jensen Hughes
3610 Commerce Drive, Suite B17
Baltimore, MD 21227
P 410-737-8677

DETAILED DEVELOPMENT PLAN
(APRIL 29, 2016)

key

NORTH

project

WILLS WHARF
OFFICE/HOTEL

HARBOR POINT
BALTIMORE, MARYLAND

seal

issued	date	description

title

PILE SCHEDULE

drawn by:	E.C.
checked by:	S.Y.
scale:	NONE
project number:	MRCE - 12582

scaled inch

sheet number

DDP-F1.60

Tuesday, Sep 20, 2016 – 02:38:31 PM
© Beatty Harvey Coco Architects, LLP
Eugina Cherkasskaya G:\DWGS\125\12582\DDP-F1.60.dwg